Lexicon® | MX300 | Stereo Reverb Effects Processor

MX300 User Guide

IMPORTANT SAFETY INSTRUCTIONS

The symbols shown above are internationally accepted symbols that warn of potential hazards with electrical products. The lightning flash with arrowpoint in an equilateral triangle means that there are dangerous voltages present within the unit. The exclamation point in an equilateral triangle indicates that it is necessary for the user to refer to the owner's manual.

These symbols warn that there are no user serviceable parts inside the unit. Do not open the unit. Do not attempt to service the unit yourself. Refer all servicing to qualified personnel. Opening the chassis for any reason will void the manufacturer's warranty. Do not get the unit wet. If liquid is spilled on the unit, shut it off immediately and take it to a dealer for service. Disconnect the unit during storms to prevent damage.

SAFETY INSTRUCTIONS

NOTICE FOR CUSTOMERS IF YOUR UNIT IS EQUIPPED WITH A POWER CORD.

WARNING: THIS APPLIANCE MUST BE EARTHED.

The cores in the mains lead are coloured in accordance with the following code:

GREEN and YELLOW - Earth BLUE - Neutral BROWN - Live

As colours of the cores in the mains lead of this appliance may not correspond with the coloured markings identifying the terminals in your plug, proceed as follows:

- The core which is coloured green and yellow must be connected to the terminal in the plug marked with the letter E, or with the earth symbol, or coloured green, or green and yellow.
- The core which is coloured blue must be connected to the terminal marked N or coloured black.
- The core which is coloured brown must be connected to the terminal marked L or coloured red.

This equipment may require the use of a different line cord, attachment plug, or both, depending on the available power source at installation. If the attachment plug needs to be changed, refer servicing to qualified service personnel who should refer to the table below. The green/yellow wire shall be connected directly to the units chassis.

CONDUCTOR		WIRE COLOR	
		Normal	Alt.
L	LIVE	BROWN	BLACK
N	NEUTRAL	BLUE	WHITE
E	EARTH GND	GREEN/YEL	GREEN

WARNING: If the ground is defeated, certain fault conditions in the unit or in the system to which it is connected can result in full line voltage between chassis and earth ground. Severe injury or death can then result if the chassis and earth ground are touched simultaneously.

WARNING FOR YOUR PROTECTION PLEASE READ THE FOLLOWING:

KEEP THESE INSTRUCTIONS

HEED ALL WARNINGS

FOLLOW ALL INSTRUCTIONS

THE APPARATUS SHALL NOT BE EXPOSED TO DRIPPING OR SPLASHING LIQUID AND NO OBJECT FILLED WITHI LIQUID, SUCH AS VASES, SHALL BE PLACED ON THE APPARATUS.

CLEAN ONLY WITH A DRY CLOTH.

DO NOT BLOCK ANY OF THE VENTILATION OPENINGS. INSTALL IN ACCORDANCE WITH THE MANUFACTURER'S INSTRUCTIONS.

DO NOT INSTALL NEAR ANY HEAT SOURCES SUCH AS RADIATORS, HEAT REGISTERS, STOVES, OR OTHER APPARATUS (INCLUDING AMPLIFIERS) THAT PRODUCE HEAT.

ONLY USE ATTACHMENTS/ACCESSORIES SPECIFIED BY THE MANUFACTURER.

UNPLUG THIS APPARATUS DURING LIGHTNING STORMS OR WHEN UNUSED FOR LONG PERIODS OF TIME.

Do not defeat the safety purpose of the polarized or grounding-type plug. A polarized plug has two blades with one wider than the other. A grounding type plug has two blades and a third grounding prong. The wide blade or third prong are provided for your safety. If the provided plug does not fit your outlet, consult an electrician for replacement of the obsolete outlet.

Protect the power cord from being walked on or pinched particularly at plugs, convenience receptacles, and the point where they exit from the apparatus.

Use only with the cart stand, tripod bracket, or table specified by the manufacture, or sold with the apparatus. When a cart is used, use caution when moving the cart/apparatus combination to avoid injury from tip-over.

Refer all servicing to to qualified service personnel. Servicing is required when the apparatus has been damaged in any way, such as power-supply cord or plug is damaged, liquid has been spilled or objects have fallen into the apparatus, the apparatus has been exposed to rain or moisture, does not operate normally, or has been dropped.

POWER ON/OFF SWITCH: The Power switch used in this piece of equipment DOES NOT break the connection from the mains.

MAINS DISCONNECT: The plug shall remain readily operable. For rack-mount or installation where plug is not accessible, an all-pole mains switch with a contact separation of at least 3 mm in each pole shall be incorporated into the electrical installation of the rack or building.

FOR UNITS EQUIPPED WITH EXTERNALLY ACCESSIBLE FUSE RECEPTACLE: Replace fuse with same type and rating only.

MULTIPLE-INPUT VOLTAGE: This equipment may require the use of a different line cord, attachment plug, or both, depending on the available power source at installation. Connect this equipment only to the power source indicated on the equipment rear panel. To reduce the risk of fire or electric shock, refer servicing to qualified service personnel or equivalent.

IMPORTANT SAFETY INSTRUCTIONS

DECLARATION OF CONFORMITY

Manufacturer's Name: Lexicon
Manufacturer's Address: 8760 S. Sandy Parkway
Sandy, Utah 84070, USA

declares that the product:

Product name: MX300
Note: Product name may be suffixed by the letters-EU.

Product option: None

conforms to the following Product Specifications:

Safety: IEC 60065 (7th ed. 2001)

EMC: EN 55013 (2001+A1)
EN 55020 (1998)

Supplementary Information:

The product herewith complies with the requirements of the Low Voltage Directive 73/23/EEC and the EMC Directive 89/336/EEC as amended by Directive 93/68/EEC.

Vice-President of Engineering-MI
8760 S. Sandy Parkway
Sandy, Utah 84070, USA
Date: December 15, 2006

European Contact: Your local Lexicon Sales and Service Office or

Harman Music Group
8760 South Sandy Parkway
Sandy, Utah
84070 USA
Ph: (801) 566-8800
Fax: (801) 566-7005

U.K. MAINS PLUG WARNING

A molded mains plug that has been cut off from the cord is unsafe. Discard the mains plug at a suitable disposal facility. NEVER UNDER ANY CIRCUMSTANCES SHOULD YOU INSERT A DAMAGED OR CUT MAINS PLUG INTO A 13 AMP POWER SOCKET. Do not use the mains plug without the fuse cover in place. Replacement fuse covers can be obtained from your local retailer. Replacement fuses are 13 amps and MUST be ASTA approved to BS1362.

ELECTROMAGNETIC COMPATIBILITY

This unit conforms to the Product Specifications noted on the **Declaration of Conformity**. Operation is subject to the following two conditions:

- this device may not cause harmful interference, and
- this device must accept any interference received, including interference that may cause undesired operation.

Operation of this unit within significant electromagnetic fields should be avoided.

- use only shielded interconnecting cables.

Warranty

This warranty is valid only for the original purchaser and only in the United States.

1. The warranty registration card that accompanies this product must be mailed within 30 days after purchase date to validate this warranty. Proof-of-purchase is considered to be the burden of the consumer.

2. Lexicon Professional warrants this product, when bought and used solely within the U.S., to be free from defects in materials and workmanship under normal use and service.

3. Lexicon Professional's liability under this warranty is limited to repairing or, at our discretion, replacing defective materials that show evidence of defect, provided the product is returned to Lexicon professional WITH RETURN AUTHORIZATION from the factory, where all parts and labor will be covered up to a period of 1 year. A Return Authorization number must be obtained from Lexicon Professional by telephone. The company shall not be liable for any consequential damage as a result of the product's use in any circuit or assembly.

4. Lexicon Professional reserves the right to make changes in design or make additions to or improvements upon this product without incurring any obligation to install the same additions or improvements on products previously manufactured.

5. The foregoing is in lieu of all other warranties, expressed or implied, and Lexicon Professional neither assumes nor authorizes any person to assume on its behalf any obligation or liability in connection with the sale of this product. In no event shall Lexicon Professional or its dealers be liable for special or consequential damages or from any delay in the performance of this warranty due to causes beyond its control.

TABLE OF CONTENTS

INTRODUCTION **1**

INCLUDED ITEMS **1**

QUICK START **2**
Standard Parallel Connection 2
Powering the Unit 2
Set Audio Levels 2
Select and Load a Program 3

THE FRONT PANEL **4**
Gain LEDs 4
Input Knob 4
Main Display 4
Page / Select Knob 4
Exit 4
Tempo 4
Effect Bypass 4
Edit Knobs A, B, C 4
Store 5
System 5
Bypass 5
User and Factory LEDs 5
Program Number Display 5
Program / Load 5
Power Switch 5

THE REAR PANEL **6**
Power Jack 6
USB Port 6
Footswitch Input 6
MIDI In, MIDI Thru 6
S/PDIF Digital In / Out 6
Balanced Analog Line Output Pair 6
Balanced Analog Line Input Pair 7

CONNECTING THE MX300 ..... **8**
Mixer - Stereo Setup 8
Mixer - Mono In/Stereo Setup 8
Mixer - Dual Mono In/Stereo Out Setup 9
Mixer - Dual Mono In/Out Setup 9
Guitar - Effects Loop Setup 10
Instrument - In Line Setup 10
Studio - Digital Setup 11

THE MX300 AND DIGITAL I/O 12

USING THE MX300..... 13
Selecting and Loading Programs..... 13
Storing/Copying Programs..... 13
Editing a Program..... 13
Changing an Effect..... 14
Changing Knob Assignments..... 15
Effect Mix/Routing..... 16
Editing Effect/Mix Routing..... 17
Tempo Button..... 17
Bypass Buttons..... 17

EFFECTS DESCRIPTIONS 18
Parallel vs. Serial..... 18
Reverbs..... 18
Delays..... 22
dbx® Dynamics..... 25
Modulated Effects 27

MX300 SYSTEM MENUS 30

THE MX-EDIT™ EDITOR/LIBRARIAN - WINDOWS® AND MAC™ .. 34
Installing the MX-Edit Editor/Librarian Software - Windows 34
Installing the MX-Edit Editor/Librarian Software - Mac 34
Quick Start..... 35
The MX-Edit Library..... 36
Editing a Program..... 36
The MX-Edit Program Editor..... 37
Saving a Program..... 39
Storing a Program..... 39
Archiving..... 40

USING THE MX300 AS A HARDWARE PLUG-IN 41
Installing the MX-Edit Hardware Plug-Ins 41
Connecting the MX300..... 41
Software Configuration 42
Using the MX300 Plug-In Window..... 43
Controls..... 43

MIDI IMPLEMENTATION CHART 44

MIDI CC MAPS 45

PROGRAM LIST..... 48

SPECIFICATIONS 51

INTRODUCTION

Congratulations and thank you for purchasing the MX300 Stereo Reverb Effects Processor! You now have the rich, luscious sound that's defined studio reverb for three decades; something only a Lexicon hardware processor can deliver. Not only does the MX300 deliver sonically, it also offers the flexibility of programming high-quality effects right inside your VST® or AU compatible computer DAW program. Its rugged road-tested construction will ensure it works night after night for your sound reinforcement needs. With the multiple routing options and extensive effects library, you will find the MX300 is right at home both live and in your studio.

The utmost care was taken while your MX300 was being manufactured. Everything should be included and in perfect working order. If anything is missing, contact the factory at once. Please help us become acquainted with you and your needs by completing your warranty card or registering online at www.lexiconpro.com. It is your safeguard should a problem arise with your MX300.

INCLUDED ITEMS

- MX300 Stereo Reverb Effects Processor
- This owner's manual
- MX Edit/USB driver CD
- Power Cord
- Lexicon Warranty Card
- Four bumpons

QUICK START

Ideally, you should read this entire manual before using the MX300. But, if you just can't wait to get started, this section explains how to set up a simple parallel connection (using the MX300 with a mixer) and select a program.

STANDARD PARALLEL CONNECTION

1. Connect the mixer's Post Fader Aux Send outputs to the MX300's **Left** and **Right** inputs.
2. Connect the MX300 **Left** and **Right** outputs to a stereo Aux Return input on the mixer (or a stereo line input, or two adjacent line inputs if you like).

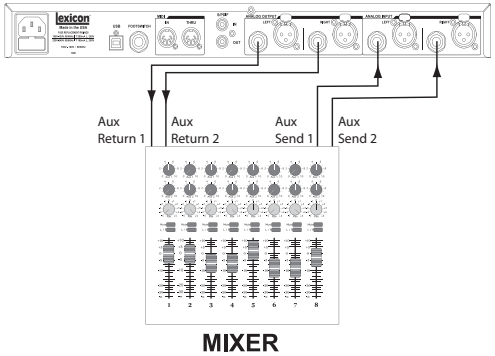

POWERING THE UNIT

1. Plug the included power cord into an A/C outlet.
2. Connect the power cord to the **Power Jack** connection on the MX300's back panel and turn on the MX300's power.

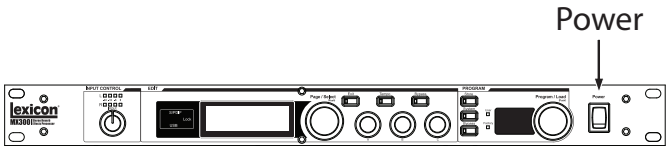

SET AUDIO LEVELS

1. Set the gain on the mixer's input channel appropriate to the source (vocal mic, guitar, keyboard, etc.).
2. Set the Aux Master level (if provided on your console) to the 12 o'clock position.
3. Set the **Input** level on the MX300 to the 12 o'clock position.
4. Provide a signal source signal on the selected mixer channel.
5. Turn up the Aux Send levels on the channel corresponding to the Post-fader send (Aux 1 and Aux 2 in this example) that the MX300 is connected to until the red **Input Gain LEDs** light only occasionally. If the red **Input Gain LEDs** stay lit, too much signal is being sent to the MX300; reduce the Aux Master or Aux Send on the mixer.

6. Turn up the Aux Return 1 and 2 to the 12 o'clock position, or stereo line input faders to the 0dB position, if you used that connection.
7. To increase or decrease the amount of effect on the signal, adjust the Aux Send level on the channel that you want affected.

SELECT AND LOAD A PROGRAM

Turn the **Program/Load** knob to choose a program. The **Program Number Display** flashes the number of the program to be loaded. Press the knob to load the program.

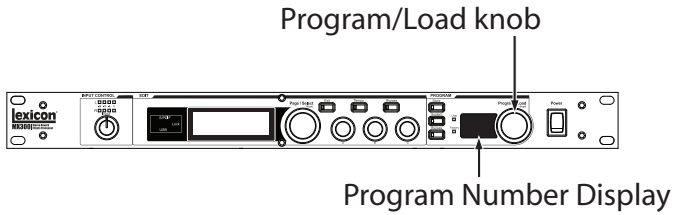

Note that the MX300 comes with 99 Factory programs and 99 User programs. Factory and User LED's to the left of the **Program Number Display** window indicate whether the displayed program is a Factory or User program. For more information about editing programs, see page 13.

THE FRONT PANEL

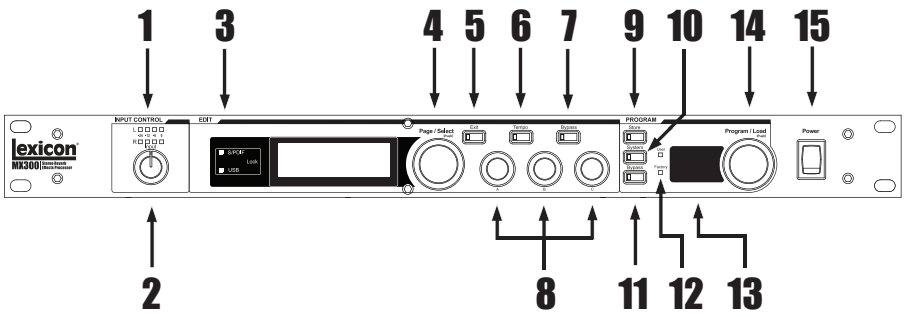

1. Gain LEDs
Indicate input signal strength of each of the MX300's inputs. Range is from –24dB, –12dB, –6dB, and 0dB.

2. Input Knob
Controls input gain of the stereo inputs.

3. Main Display
The Main Display features two LEDs and an LCD. The LEDs indicate when the S/PDIF I/O has sync lock, and when there is USB connectivity. The LCD shows program and parameter editing information and System Menu settings.

4. Page / Select Knob
Used to navigate the MX300 effects, parameters, and System menus.

5. Exit
Pressing this button will back you out one level of editing.

6. Tempo
Sets the delay time of delay effects.

7. Effect Bypass
Pressing this button bypasses or mutes the selected effect in the Main Display. One of four bypass/mute functions can be assigned to this button: Dry, Mute, Input Dry, and Input Mute. See page 17 for more information.

8. Edit Knobs A, B, C
These knobs modify the associated parameters in the Main Display when editing programs or change the settings in the System Menu.

9. Store
Used to store or copy programs to the same or different user memory locations.

10. System
Accesses the System global setup menus.

11. Bypass
Pressing this button bypasses or mutes the currently selected program.

12. User and Factory LEDs
Indicate whether the selected program is User or Factory.

13. Program Number Display
Displays the number of the selected program.

14. Program / Load
Selects factory and user programs. Pressing this knob loads the program manually if program Auto Load is disabled. When in the Program Screen, press this knob to switch between factory and user program banks. This eliminates the need to scroll through 100 presets if you're in the middle of the user presets and you want to go to a preset in the middle of the factory presets.

15. Power Switch
Turns the MX300 on and off.

THE REAR PANEL

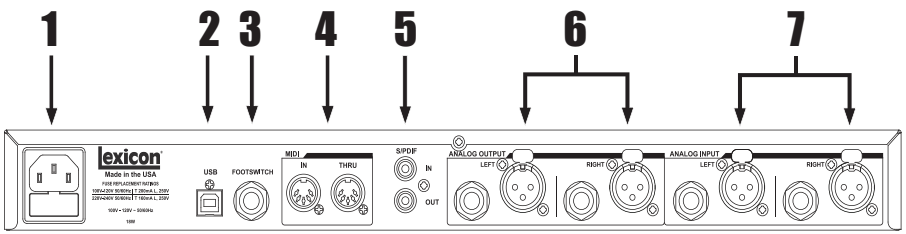

1. Power Jack
Attach the power cord here.

2. USB Port
Provides communication with a computer for use with MX-Edit™ Editor/Librarian software and MX300 plug-in window using a standard USB cable. When the MX300 is connected to a computer via USB, the blue USB LED next to the main display will light.

3. Footswitch Input
The optional Lexicon® LEX-DFS 2-button footswitch can be plugged into this TRS jack for remote control of the MX300 (see page 33 for more information).

4. MIDI In, MIDI Thru
Provides MIDI operation capabilities. Two 5-pin MIDI DIN connectors are available for MIDI IN and MIDI THRU. (See page 44 for the MIDI Implementation chart.)

5. S/PDIF Digital In/Out
Digital input accepts 44.1kHz / 48kHz signals. When the S/PDIF digital input is selected and active, the **S/PDIF** LED on the front panel lights.

Important: It is recommended that you do not connect any digital device to the MX300's S/PDIF inputs that transmits at sample rates other than 44.1 kHz or 48 kHz (such as 96kHz). Doing so can cause unpredictable performance. Make sure the device you are connecting to the MX300's **S/PDIF In** is set as the Clock Master (if that option is available) and transmitting at a sample rate of 44.1kHz or 48kHz only. As with any other connection, if you need to unplug the S/PDIF cable, it is recommended that you switch to the analog inputs (see **Input Source** in the System menus) or press the **Program Bypass** button before disconnecting the cable.

6. Balanced Analog Line Output Pair
Dual RF-filtered 1/4" balanced/unbalanced TRS and balanced XLR line outputs are servo-balanced, so no signal loss is incurred when using unbalanced connections (1/4" inputs only). If only a single plug is connected to the **Left** output, both **Left** and **Right** signals can be summed to mono by selecting **Anlg Mono L** in the System Menu.

7. Balanced Analog Line Input Pair
Left and **Right** active analog 1/4'' TRS or XLR balanced line inputs. If only a single plug is connected to the **Left** input, the signal can be split and sent to both the **Left** and **Right** input paths by selecting **Analog Mono L** in the **Input Source** section of the System Menu.

NOTE: XLR and 1/4'' inputs cannot be used simultaneously. Plugging in a 1/4'' TRS plug will disable the corresponding **Left** or **Right** XLR input.

CONNECTING THE MX300

The MX300 is an extremely versatile effects processor capable of a wide variety of applications. The MX300's multiple routings offer several connectivity options, making it extremely flexible both in the studio and for live sound. The following setups explain how the MX300 should be connected and which routings apply for your specific effects processing needs.

Mixer – Stereo Setup

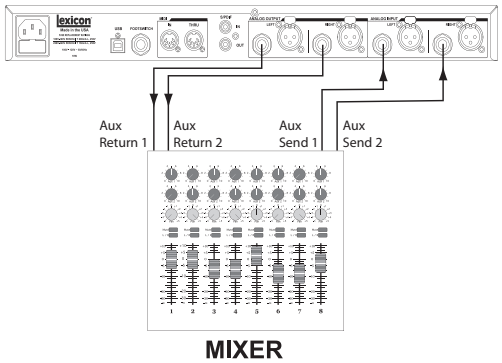

Stereo Mode configures the MX300 as a single stereo input/output processor. Left and Right signal separation is maintained through the effects chain. The **Input Source** must be set to **Anlg Stereo** in the System menu (described on page 30). This setup is ideal for use with programs using Cascade, Parallel, and Stereo routings (see page 16 for more information about routings).

Mixer - Mono In/Stereo Out Setup

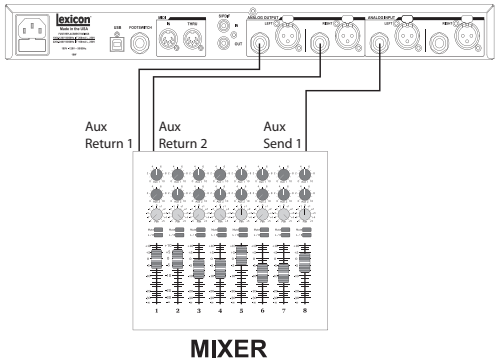

This setup is the most commonly used configuration in both live and studio applications. A single input source is fed into the MX300, processed, and output as a stereo

signal. The **Input Source** must be set to **Anlg Mono L** in the System menu (described on page 30). This setup is ideal for programs using Cascade, Parallel, and Stereo routings (see page 16 for more information about routings).

Mixer - Dual Mono In/Stereo Out Setup

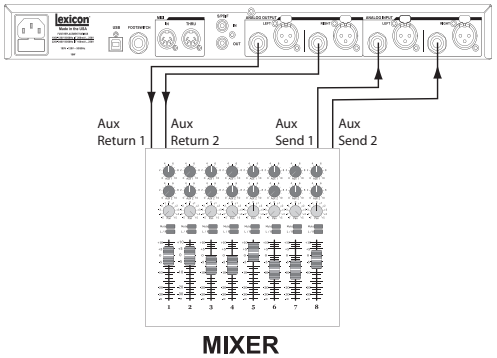

This setup lets the MX300 act as two effects processors. Separate input sources are fed into the MX300 and processed independently with different effects, then output as a mixed stereo signal. The **Input Source** must be set to **Anlg Stereo** in the System menu (described on page 30). This setup is ideal for programs using the Mono Split routing (see page 16 for more information about routings).

Mixer - Dual Mono In/Out Setup

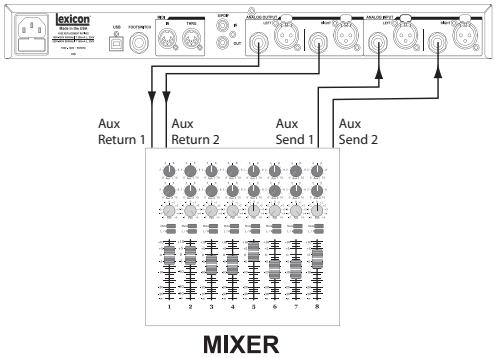

This setup lets the MX300 act as two effects processors. Separate input sources are fed into the MX300 and processed independently with different effects, then output as separate mono signals. The **Input Source** must be set to **Anlg Stereo** in the System menu (described on page 30). This setup is ideal for programs using the Mono Split routing (see page 16 for more information about routings).

Guitar - Effects Loop Setup

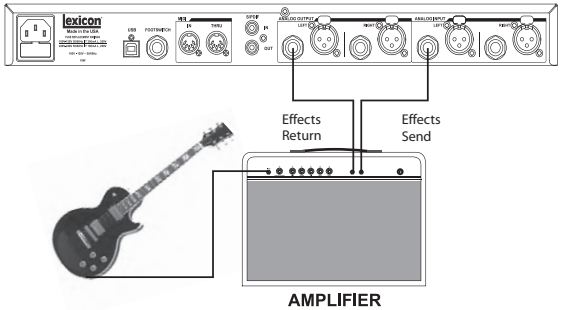

This setup is optimized for use within a guitar amplifier effects loop system. A single input source is fed into the MX300 and output as a mono signal. The **Input Source** must be set to **Anlg Mono L** in the System menu (described on page 30). This setup is ideal for programs using Cascade, Parallel, and Stereo routings (see page 16 for more information about routings).

Instrument - In Line Setup

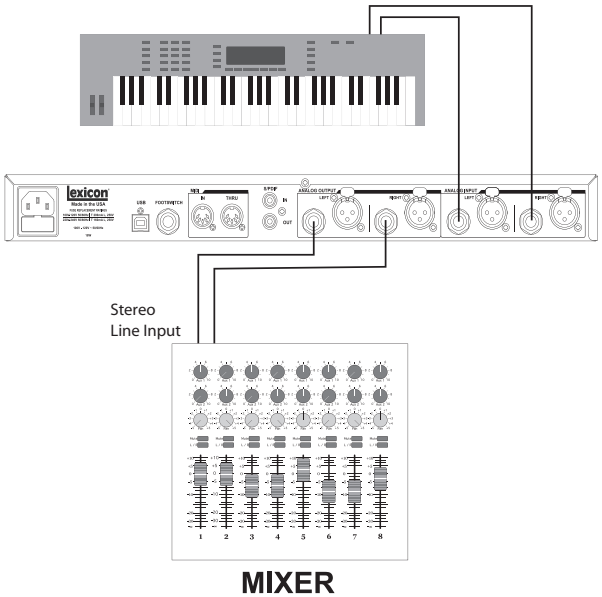

This setup allows a line level instrument such as an electronic keyboard to be connected directly to the MX300. Connect the outputs of the line level instrument to the MX300 inputs and connect the MX300 outputs to the input channels of a mixer, or the inputs of a powered speaker system. The **Input Source** must be set to **Anlg Stereo** in

the System menu (described on page 30). This setup is ideal for use with programs using Cascade, Parallel, and Stereo routings (see page 16 for more information about routings).

Studio – Digital Setup

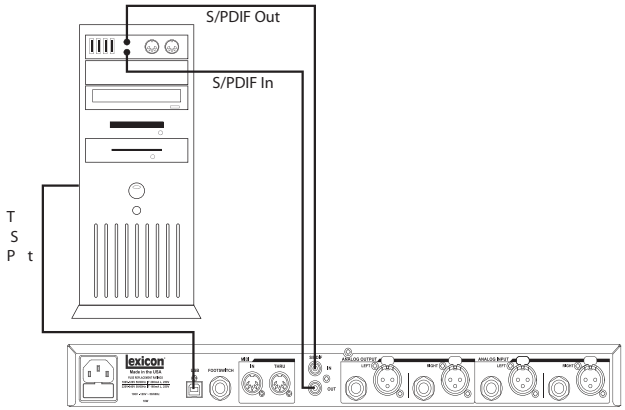

This setup is ideal if you are using the MX300 as a hardware plug-in in a digital recording system. This setup requires that you are using an I/O device with S/PDIF In/Out, or a digital mixer with S/PDIF I/O option. The **Input Source** must be set to **Digital,** and the **Clock Source** should be set to **Digital** in the System menu (described on pages 30-31).

THE MX300 AND DIGITAL I/O

The MX300 is equipped with digital input and output connections (S/PDIF). The S/PDIF input and output are the digital equivalent of the analog inputs/outputs. The digital output on the MX300 is always active and will always mirror its analog output counterpart. This allows you to plug in an analog input source and have it be output as a digital stream.

The MX300 has three options for input sources which are configurable in the System Menu: **Analog Mono L** (Left), **Analog Stereo** and **Digital**. (Press the **System** button to access the System Menu; turn the **Page/Select** knob to scroll up and down the menu.)

While in the System Menu, use **Knobs A**, **B**, and **C** to change values. As with all equipment that receives digital audio streams, when setting the Input Source to **Digital**, the MX300 can no longer use its own internal clock source for the audio stream, and it is necessary to change the clock source from the MX300's internal clock to **Digital** as it needs to use the external clock source via the S/PDIF input.

If the **Clock Source** isn't changed to **Digital** when the digital input source is selected, there will be synchronization problems between the incoming digital audio stream and the MX300's processing, and the System Input Source menu will display **DIG NO LOCK**. When the MX300 is properly synchronized with the incoming digital audio, the System's Input Source and Clock Source menus display **DIG LOCKED**.

The MX300 runs at 44.1 kHz or 48 kHz sample rate (using internal or external clock sources). Do not connect external digital outputs to the MX300 that run at higher sample rates (88.2 - 192 kHz) as the MX300 cannot accept them.

USING THE MX300

SELECTING AND LOADING PROGRAMS

1. Choose a program by rotating the **Program** knob. The selected program number flashes in the **Program Display** until loaded. The name of the program also appears in the MX300's **Main Display**. The **Factory** or **User** light next to the **Program Display** lights to indicate whether a Factory or User program is selected.
2. Press the **Program** knob to load the program. If you would like the programs to be loaded automatically as they are selected with the **Program** knob, you can enable the **Auto Load** in the MX300's System menu.

STORING/COPYING PROGRAMS

1. Press the **Store** button once. You will now be on the program naming screen.
2. Turn the **Page/Select** knob to move the cursor to the character you want to change. Turn **Edit Knob A** to change the character. Turn **Edit Knob B** to change the letter case. Press the **Page/Select** knob to clear a character from the name.

3. When naming is complete, press the **Store** button again. Turn the **Page/Select** or **Program/Load** knob to select the new user program memory location to store to.
4. Press the **Store** button again to complete the store procedure.

EDITING A PROGRAM

Once a program has been loaded, you may find you want to make adjustments to it for your particular application or use. Editing of programs is done using the **Page/Select** and three **Edit** knobs (**A**, **B**, and **C**) to the right of the **Main Display**. Each effect can be edited independently by selecting it with the **Page/Select** knob. As the effect is selected, its name is highlighted in the **Main Display** and three parameters become visible for the effect at the bottom of the **Main Display**. The **Edit** knobs can then modify these three top level parameters.

(Fig. A)

In Figure A the **Edit Knobs A**, **B**, and **C** will modify the Tape Delay effect's Delay Time, Delay Ratio, and Feedback parameters respectively. Programs using routing 5 - Stereo have several other parameters that can be modified from the Edit Effect menus.

Editing From the Program Display

1. Select the program you want to edit and load it using the **Program** knob.
2. Select the effect you would like to edit using the **Page/Select** knob until the effect name is highlighted in the **Main Display**.
3. Turn the **A**, **B**, or **C Edit** knobs to modify a parameter setting.

When finished, store your changes to the program if you would like them to be recalled.

Editing From the Program Edit Menus

1. While on the program you would like to edit, press the **Page/Select** knob. This will enter the Program Edit menus.
2. There can be two effects to edit in each program, Effect 1 and Effect 2. Turn the **Page/Select** knob until the effect menu of the effect you want to edit is highlighted (Effect 1 menu is highlighted in our example).
3. Press the **Page/Select** knob to enter the Edit Effect menu.
4. Turn the **Page/Select** knob until the parameter(s) you want to edit appear in the **Main Display**. Each parameter has either an A, B, or C labeled to the left of its name indicating which **Edit** knob will modify its value.
5. Turn the **A**, **B**, or **C Edit** knob associated with the parameter you would like to edit to change its setting.

When finished, store the changes to the program if you would like them to be recalled.

CHANGING AN EFFECT

Each program offers a library of effects that can be used in the available effect modules. This allows you to customize a preset with the effects you need for your particular application.

1. While on the Program you would like to edit, press the **Page/Select** knob. This will enter the Program Edit menus.
2. Turn the **Page/Select** knob until the Change Effect menu is highlighted. Change Effect 2 is selected in our example.
3. Press the **Page/Select** knob to enter the Change Effect 2 menu.
4. Once in the Change Effect menu, turn the **Page/Select** knob to move through the library of effects until you find the one you want to use.
5. Press the **Page/Select** knob to load the newly selected effect into the effect location. You will be able to hear the new effect in place in the effect routing at this time. If you choose not to select a new effect, press the **Exit** button to abort changing effects.

When finished, store the changes to the program if you would like them to be recalled.

CHANGING KNOB ASSIGNMENTS

The three parameters that appear for editing from the Program Screen when a program using routing 5 - Stereo (single effect) is loaded are user selectable. From the factory, these parameters were selected for these programs by their importance to the effect. If you would like to access other parameters for this effect from the Program Screen, you can select these in the Knob Assignments menu. These assignments are individual to each program so you can customize specific parameters for each effect depending on the program.

1. While on the Program Screen, press the **Page/Select** knob. This will enter the Program Edit menus.
2. Turn the **Page/Select** knob until the Knobs Assign menu is highlighted.
3. Press the **Page/Select** knob to enter the Knobs Assign menu.
4. Turn either the **A**, **B**, or **C** knobs to select which parameter you want available for editing from the Program Screen.

When finished, store the changes to the program if you would like them to be recalled.

EFFECT MIX/ROUTING

Each of the MX300 programs offers programmable effect routing and a wet/dry mix parameter for each effect. These different routings and mix controls give you many options for your effect signal path and precise control over balance between the two effects.

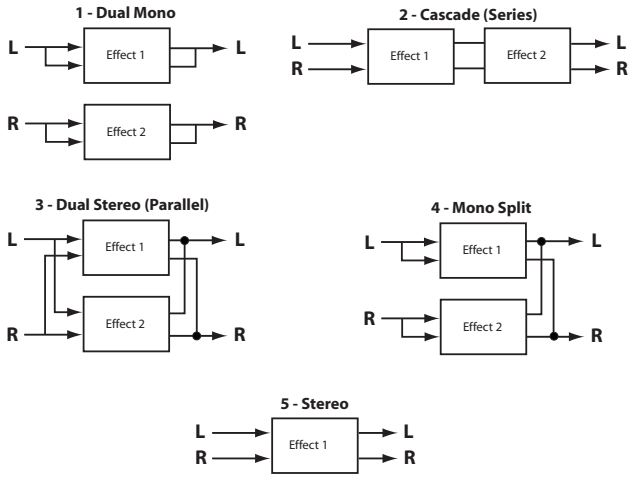

1 - Dual Mono

This routing option sends the Left and Right input signals through Effect 1 and Effect 2 respectively. Each signal is then routed to its respective output, completely independent from the other.

2 - Cascade

Left and Right input signals are sent first through Effect 1, then through Effect 2, then routed as a stereo signal to their respective outputs.

3 - Parallel (Dual Stereo)

Left and Right input signals are sent through both effects independently. The output signals of both Effects are then mixed together, and routed to both the outputs as a single stereo signal.

4 - Mono Split

Left input signal is sent through Effect 1, while the Right input signal is sent through Effect 2. The output signals of both Effects are then mixed together, and routed to both the outputs as a single stereo signal.

5 - Stereo

Routing 5 provides a single high-quality stereo effect that utilizes all the MX300's DSP horsepower. With extra editable parameters and an increased complexity of the reverb algorithms, use this routing when all you need is a powerful stereo effect for your application.

EDITING EFFECT MIX/ROUTING

1. While on the Program Screen, press the **Page/Select** knob. This will enter the **Program Edit** menus.
2. Turn the **Page/Select** knob until the Edit Mix/Routing menu is highlighted.
3. Press the **Page/Select** knob to enter the Edit Mix/Routing menu.
4. Turn **Knob A** to select different effect routings for the program. Use **Knob B** and **Knob C** (when available) to adjust the wet/dry mix for each effect.

Note: For programs using routing 5 - Stereo, there is only one effect available so Effect 2 Mix will not be available.

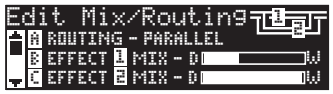

When finished, store the changes to the program if you would like them to be recalled.

TEMPO BUTTON

The **Tempo** button is used for quickly setting the tempo parameter in delay effects. In some cases there may be two delays set up in a program using two effects. The **Tempo** button will flash at the rate of the delay which is highlighted in the **Main Display**. To set the tempo of the second delay, turn the **Page/Select** knob until the second delay is highlighted in the **Main Display**. The **Tempo** button can now set the delay time for this delay. Although the **Store** button doesn't light when changing tempo settings with the **Tempo** button, changes to tempo must be saved to the program if the changes are to be recalled later.

BYPASS BUTTONS

The MX300 is equipped with two bypass buttons: **Effect Bypass** (located near the **Page/Select** knob and **Program Bypass** (located near the **Program/Load** knob). **Effect Bypass** only bypasses the selected effect in the **Main Display**. This lets you bypass effects individually in programs. **Effect Bypass** can also be saved with the program. **Program Bypass** is a global bypass control for MX300. All effects in all configurations are bypassed when **Program Bypass** is engaged.

There are four different options Bypass can be set to function as:

1. **Dry** - Bypasses dry signal around an effect or program.
2. **Mute** - Mutes all input and output audio.
3. **Input Dry** - Outputs signal with no processing or effects.
4. **Input Mute** - Mutes the input only.

The Bypass options can be selected in the System Menu and will affect both **Effect Bypass** and **Program Bypass**.

EFFECTS DESCRIPTIONS

PARALLEL VS. SERIAL

The MX300 can be used as both a Parallel and Serial (in-line) effects processor. Typically, reverbs and delays are used in parallel, compressors and de-essers in serial, and modulated effects can be used in either configuration, depending on the desired application.

A *Parallel Processor* is connected by sending a copy of a signal (such as from an Aux Send of a mixer channel) to an effects device (such as the MX300), and the effected (or wet) signal is returned to the mixer or amp. It is then blended together with the original unaffected (dry) signal. This blend is called the Wet/Dry mix. This connection is most often used for reverbs, delays, and some modulated effects (such as chorus).

A *Serial Processor* is connected by sending the entire signal through the effects device and then to an amplifier or mixer, and is not blended with the unaffected (dry) signal. This is the type of connection most often used for a compressor, de-esser, equalizer, and many modulated effects (such as tremolo, vibrato, and rotary).

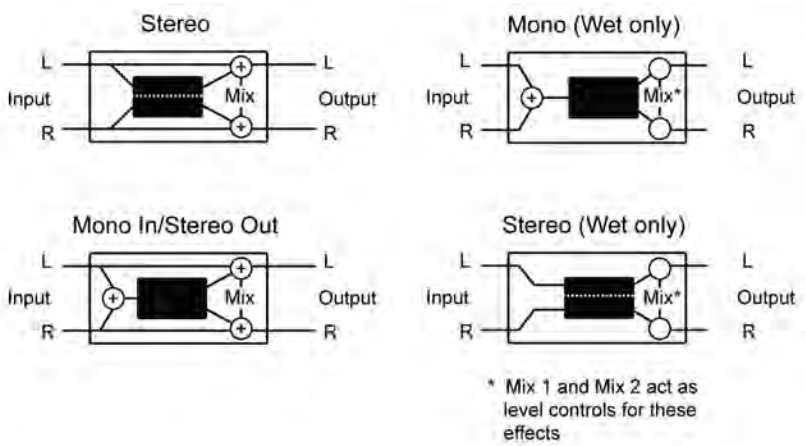

REVERBS

Reverberation (or "reverb" for short) is the complex effect created by the way we perceive sound in an enclosed space. When sound waves encounter an object or boundary, they don't just stop. Some of the sound is absorbed by the object, but most of the sound is reflected or is diffused. In an enclosed space, reverb is dependent on many features of that space, including the size, shape and the type of materials that line the walls. Even with closed eyes, a listener can easily tell the difference between a closet, a locker room and a large auditorium. Reverb is a natural component of the acoustic experience, and most people feel that something is missing without it.

Hall Reverbs - *Stereo*

SMALL HALL, LARGE HALL, VOCAL HALL, DRUM HALL

A **Hall** reverb is designed to emulate the acoustics of a concert hall – a space large enough to contain an orchestra and an audience. Because of the size and characteristics, Halls are the most natural-sounding reverbs, designed to remain "behind" the direct sound – adding ambience and space, but leaving the source unchanged. This effect has a relatively low initial echo density which builds up gradually over time. **Vocal Hall** and **Drum Hall** reverbs are specifically tailored for those uses. **Vocal Hall** has as lower overall diffusion which works well with program material that has softer initial transients like a voice. **Drum Hall** has a higher diffusion setting which is necessary to smooth out faster transient signals found in drums and percussion instruments. In addition to general instrumental and vocal applications, the Hall program is a good choice for giving separately recorded tracks the sense of belonging to the same performance.

Plate Reverbs - *Stereo*

SMALL PLATE, LARGE PLATE, VOCAL PLATE, DRUM PLATE

A **Plate** reverb is a large, thin sheet of metal suspended upright under tension on springs. Transducers attached to the plate transmit a signal that makes the plate vibrate, causing sounds to appear to be occurring in a large, open space. The Plates in the MX300 model the sound of metal plates with high initial diffusion and a relatively bright, colored sound. **Plate** reverbs are designed to be heard as part of the music, mellowing and thickening the initial sound. **Plate** reverbs are often used to enhance popular music, particularly percussion.

Room Reverb - *Stereo*

Room produces an excellent simulation of a very small room which is useful for dialog and voiceover applications. **Room** is also practical when used judiciously for fattening up high energy signals like electric guitar amp recordings.

Chamber Reverb - *Stereo*

Historically, recording studio chambers were oddly shaped rooms with a loudspeaker and set of microphones to collect ambience in various parts of the room. **Chamber** programs produce even, relatively dimensionless reverberation with little color change as sound decays. The initial diffusion is similar to the **Hall** programs. However, the sense of size and space is much less obvious. This characteristic, coupled with the low color of the decay tail, makes these programs useful on a wide range of material - especially the spoken voice, to which **Chamber** programs add a noticeable increase in loudness with low color.

Gated Reverb - *Mono In/Stereo Out*

Gated reverb is created by feeding a reverb, such as a metal plate, through a gate device. Decay Time is set to instant, while Hold Time varies duration and sound. The **Gated** reverb provides a fairly constant sound with no decay until the reverb is cut off abruptly. This program works well on percussion — particularly on snare and toms; be sure to experiment with other sound sources as well.

Reverse Reverb - *Mono In/Stereo Out*

Reverse reverb works in the opposite fashion from normal reverb. Whereas a normal reverb has the loudest series of reflections heard first that then become quieter over time, the **Reverse** reverb has the softest reflections (essentially the tail of the reverb) heard first, and then grows louder over time until they abruptly cut off.

Ambience Reverb - *Stereo*

Ambience is used to simulate the effect of a small or medium sized room without noticeable decay. It is often used for voice, guitar or percussion.

Studio Reverb - *Stereo*

Much like **Room** reverb, **Studio** produces an excellent simulation of smaller, well-controlled acoustic spaces, characteristic of the main performance areas in recording studios. **Studio** is also useful with dialog and voiceover applications as well as individual instrument and electric guitar tracks.

Arena Reverb - *Stereo*

Arena reverb emulates a huge physical space such as an indoor sports venue or stadium. The characteristics of **Arena** reverb are long secondary reflection times and a reduced amount of high frequency content. **Arena** is a mostly mid- and low-frequency dominant reverb, and is an ideal selection for "special effect" type applications that require extremely long reverb times. It is not a good choice for a very busy mix, since it can reduce intelligibility.

Spring Reverb - *Mono In/Stereo Out*

A **Spring** reverb is created by a pair of piezoelectric crystals—one acting as a speaker and the other acting as a microphone—connected by a simple set of springs. The characteristic 'boing' of a spring is an important component of many classic rock and rockabilly guitar sounds.

Reverb Controls

Pre Delay

Creates an additional time delay between the source signal and the onset of reverberation. This control is not intended to precisely mimic the time delays in natural spaces, as the build-up of reverberation is gradual, and the initial time gap is usually relatively short. For the most natural effect, the **Pre Delay** values should be set in the range of 10-25 milliseconds. However, if a mix is very busy or overly cluttered, increasing the **Pre Delay** time may help clarify it, and set each instrument apart from each other.

Mid RT and Decay

Controls the amount of time the reverb can be heard. Higher settings increase reverberation times which are usually associated with larger acoustical environments, but can decrease intelligibility. Lower settings shorten reverb times and should be used when a smaller apparent space or a more subtle effect is desired.

Diffusion

Controls the initial echo density. High settings of Diffusion result in high initial echo density, and low settings cause low initial density. In a real-world situation, irregular walls cause high diffusion, while large flat walls cause low diffusion. For drums and percussion, try using higher Diffusion settings.

Shape & Spread

In the Hall reverbs, Shape and Spread work together to control the overall ambience of the reverberation. Shape determines the contour of the reverberation envelope. With Shape all the way down, reverberation builds explosively, and decays quickly. As Shape is advanced, reverberation builds up more slowly and sustains for the time set by Spread. With Shape in the middle, the build-up and sustain of the reverberation envelope emulates a large concert hall (assuming that Spread is at least halfway up, and that Size is 30 meters or larger). Low Spread settings result in a rapid onset of reverberation at the beginning of the envelope, with little or no sustain. Higher settings spread out both the buildup and sustain.

Size

Size sets the build-up rate of diffusion after the initial period (which is controlled by Diffusion). The Size control changes reverb sound from very large to very small. Generally, set this control to the approximate size of the acoustic space being created, before adjusting anything else. The size in meters is roughly equal to the longest dimension of the space. Audio is temporarily muted when Size is changed.

RT High Cut

Rt HC sets the frequency above which a 6dB/octave low-pass filter attenuates the reverberated signal. It does not attenuate the reflections. High frequencies are often rolled off with this parameter, resulting in more natural-sounding reverberation. Setting a low frequency for this parameter can actually shorten the reverb time, as it damps the audio as it recirculates.

Liveliness

Adjusts the amount of high frequency content in the reverberation tails. Higher settings increase high frequency response, creating brighter reverbs; lower settings create darker reverbs with more bass frequency emphasis.

Bass Boost

Bass Boost boosts or cuts frequencies below Crossover. The amount of boost or cut required is highly dependent on the material being processed.

Bass Boost Frequency

Sets the frequency at which the transition from Mid Rt to Low Rt takes place. This control should be set at least two octaves higher than the low frequency you want to boost. For example, to boost a signal at 100Hz, set Bass Boost Frequency to 400Hz. (This setting works well for classical music.) Crossover works best around 400Hz for boosting low frequencies, and around 1.5 kHz for cutting low frequencies.

ER Time
Adjusts the amount of time before reverb early reflections occur.

ER Level
Adjusts the level of early reflections within the reverb.

Feedback Delay
Changing this parameter changes the resonant frequencies of **Plate** reverb.

Feedback Level
Adjusts the **Plate** reverb's presence and prominence.

Boing
This is a unique parameter to the **Spring** reverb, designed to increase or decrease the amount of spring rattle that is a physical characteristic of spring tank reverbs.

DELAYS
Delays repeat a sound a short time after it first occurs. Delay becomes echo when the output is fed back into the input (feedback). This turns a single repeat into a series of repeats, each a little softer than the last.

Studio Delay - *Stereo*
The **Studio Delay** features up to 2.5 seconds of stereo delay and offers a built-in ducker that attenuates the delay output whenever signal is present at the input. This can be used to keep the original signal from being muddied up by delay repeats.

Mono Delay - *Mono In/Stereo Out*
The **Mono Delay** is the cleanest, most accurate of the delay programs, with up to 5 seconds of mono delay and the built-in ducking feature.

Tape Delay - *Mono In/Stereo Out*
In the days before digital, delays were created using a special tape recorder in which the magnetic recording tape was looped, with closely-spaced recording and playback heads. The delay effect was created by the tape moving in the space between the record and playback heads – while delay time was adjusted by changing the speed of the tape loop. Although very musical-sounding, wow and flutter combined with a significant loss of high frequencies, and to some extent also low frequencies, are all elements commonly associated with tape recordings. The **Tape Delay** offers up to 5 seconds of mono delay.

Pong Delay - *Mono In/Stereo Out*
This delay effect pans the delay repeats from left to right, while the input signal remains at its original (center) position. **Pong Delay** offers up to 5 seconds of mono delay time.

Modulated Delay - *Stereo*
The **Modulated Delay** is enhanced by an LFO (low frequency oscillator) that produces a chorusing effect on the delay repeats. This is a great delay for guitar and instrument passages that need that "special something." The **Modulated Delay** features up to 2.5 seconds of stereo modulated delay.

Reverse Delay - *Mono In/Stereo Out*
This delay effect emulates the old studio trick of flipping a tape over, playing it backwards through a tape delay, and recording the effect. The delays "build up" from softer to louder – creating the sensation that the delays come before the signal. Up to 2.5 seconds of mono delay time are available.

2-Tap Delay - *Stereo*
The **2-Tap Delay** is probably best described as an adjustable pong delay where each tap can be individually set in relation to the delay time. The 2 taps are a calculated percentage of the actual delay time from 1-100% (for example, if the delay time is 500ms and Tap 1 is set to 50% and Tap 2 is set to 100%, Tap 1 time would be 250ms and Tap 2 time would be 500ms). Narrow spacing of the tap percentages can widen the stereo image of the delay while wider tap spacing can create rhythmic delay lines.

Delay Controls
Tempo
The actual delay time as tapped in by the **Tempo** button or received via a MIDI clock source. This time can be expressed as actual time (milliseconds, seconds) or in BPM (beats per minute) values. Tempo works in conjunction with Delay Time to set the actual delay time that is heard.

Delay Time
Controls the length of the delay time relative to Tempo. At the middle of its range, delay repeats are synchronous with the **Tempo** button (represented by a Quarter Note in the display); lower values create faster repeats, while higher values increase the time between repeats.

Feedback
Controls the number of delay repeats by feeding the delay output signal back into the delay input. This creates a series of delay repeats, each slightly attenuated until they become inaudible. Higher settings create more repeats; lower settings reduce the number of repeats. When this knob is turned fully clockwise, it engages Repeat Hold – delay repeats play back in an infinite loop, but no further input signal is introduced into the delay effect.

High Pass Filter
Frequencies below this level are attenuated.

Low Pass Filter
Frequencies above this level are attenuated.

Ducker Level
Ducker Level is the level you want the delay to be heard at when signal is present. This provides attenuation (up to 18dB) of the delay signal while a performer is singing or playing to help provide intelligibility. As the performance pauses, the delay signal level returns to its normal setting.

Ducker Threshold
MX300's **Studio** and **Mono** delays offer a "ducking" feature, which causes the delay repeats to attenuate (or get softer) by –6dB when live (or input) signal is present. This allows the delay to remain as an effect, and not clash with the original signal. The higher this value is set, the louder an input signal must be for the ducking to take place.

Smear
This parameter controls the amount of "smear," or signal degradation and frequency loss. Particularly evident in the **Tape Delay**, the higher the setting, the more each delay repeat loses intelligibility compared to the original signal.

Tap 1 & 2
The Tap parameters provide independent control to the two delay taps in the **2-Tap Delay**. Each tap can be set to a percentage of the delay tempo, creating interesting rhythmic delay lines not available in the other delays.

Level 1 & 2
Adjusts the output level of Tap 1 and Tap 2.

Pan 1 & 2
Adjusts the pan position in the stereo field of Tap 1 and Tap 2.

Mod Depth
This controls the intensity of modulation, or "depth" in the **Modulated Delay**. Lower settings produce a more subtle chorus effect, while higher values give a more lush chorusing of the delay repeats.

Delay Ratio
Determines the ratio between the pong taps in the **Pong Delay**. 1:1 sets the taps at the same time apart (ratio) from one another (normal ping pong). As the ratio changes, the second tap (pong) is heard earlier or later than the first tap, creating rhythmic left/right delay lines.

Tap Swap
Switches which tap is heard first (left or right) in the **Pong Delay**.

dbx® DYNAMICS
The MX300 offers two dynamics processing modules, De Esser and Compressor, that utilize dbx's legendary digital dynamics processing technology.

De-Esser - *Stereo*
A **De-Esser** is a type of compressor used to tame excessive sibilance, or the "s" sounds in a vocal performance. Note that the De-esser does not pass dry audio.

Compressor - *Stereo*
A compressor is used to control the dynamic range of a signal. Typically used to tighten bass or drum tracks, or to control a vocal passage, a compressor is a very useful but often misunderstood tool. To better use the **Compressor** in the MX300, a bit of understanding about compression is helpful. Note that the Compressor does not pass dry audio.

When a signal level crosses the **Threshold** level, the compressor then reduces the amount of output level by an amount determined by the **Ratio**. For example, if the threshold is set to –12dB, and the ratio set to 4:1, then when signal exceeds –12dB, the signal level above that amount only increases by 1dB to every 4dB of signal level above –12dB. In this case, an incoming signal of –4dB (which is 8dB above the threshold) would result in an output signal of –10dB, or 2dB higher than the threshold level, since the 4:1 compression ratio only allowed 2dB more output, based on the 8dB increase above the –12dB threshold.

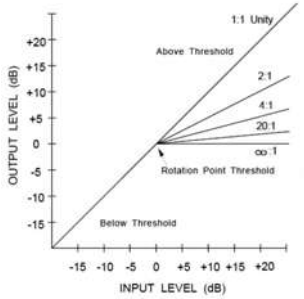

Because the resulting output is less than the original signal, a third control, **Makeup Gain** compensates for this loss of level, but with less dynamic range, or the difference between the softest and loudest parts of the signal.

Note: The De-Esser and Compressor effects are Mono In Dual Stereo configuration programs.

Dynamics Controls

Ratio

Determines the amount of compression, from 1:1 (no effect) to Infinity:1 (complete limiting).

Frequency

Selects the frequency range of compression from 1600Hz to 10kHz (the most common frequencies in which excessive sibilance occurs).

Bandwidth

Controls the bandwidth or "Quality" (Q) of frequency range. The higher the selected value, the tighter the bandwidth, and less apparent the de-essing effect is.

Threshold

Determines the threshold above which compression begins, incrementally between –70dB and 0dB.

Gain

Increases the output level to compensate for signal attenuation during compression. Incremental between 0dB (no gain) to +12dB.

Attack

Attack adjusts the attack time constant, determining how quickly the compressor responds to increasing input level. This should normally be set quite low to allow the compressor to react to sharp transients.

Release

Release allows adjustment of the release time constant, determining how quickly the compressor responds to decreasing input level. This should normally be set long. Short release times may cause an effect similar to "pumping" in an analog compressor.

Knee

In Hard Knee mode, the threshold of compression is defined as that point above which the output level no longer changes on a 1:1 basis with changes in the input level. See Figure 1.

In Soft Knee mode, the threshold of compression is defined as the middle of the threshold region, that is, "half-way" into compression, as shown in Figure 2.

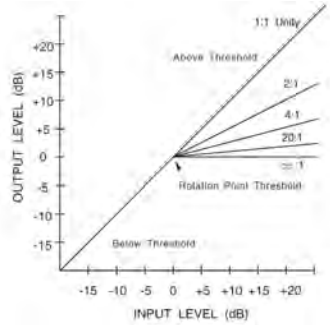

Figure 1: Hard Knee Compression Curve

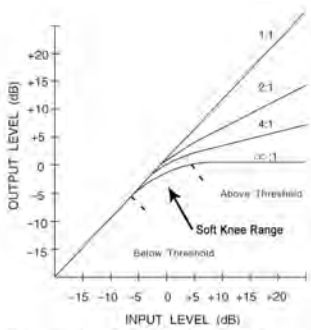

Figure 2: Soft Knee Compression Curve

MODULATED EFFECTS

Chorus - *Stereo*

Chorus creates a lush, full sound by combining two or more signals together where one is unaffected and the other signals vary in pitch very slightly over time. **Chorus** is commonly used to fatten up tracks and to add body to guitars without coloring the original tone. **Chorus** can also be used with discretion to thicken a vocal track.

Flanger - *Stereo*

This effect was originally created by simultaneously recording and playing back two identical programs on two tape recorders, then using hand pressure against the flange of the tape reels to slow down first one machine, then the other. The result was a series of changing phase cancellations and reinforcements, with characteristic swishing, tunneling, and fading sounds.

Phaser - *Stereo*

The **Phaser** automatically moves frequency notches up and down the spectrum of the signal by means of a low frequency oscillator (LFO), creating an oscillating "comb-filter" type effect. This effect is very useful on keyboards (especially pad presets) and guitars.

Tremolo/Pan - *Stereo (Wet Only)*

Tremolo and **Panner** create rhythmic changes in signal amplitude. **Tremolo** affects both channel's amplitude simultaneously, while the **Panner** affects the amplitude of each channel in an alternating manner.

Rotary - *Mono In/Stereo Out (Wet Only)*

Rotary speaker cabinets were designed to provide a majestic vibrato/choir effect for electronic theater and church organs. The most well known rotary speaker is the Leslie™ Model 122, which has two counter-rotating elements: a high-frequency horn and a low-frequency rotor with slow and fast speeds. The sound generated as the spinning elements change speed is truly magical. The swirling, spacious effect is difficult to describe – but clearly recognizable.

The **Rotary** effect is modeled after a Leslie-style cabinet. The input signal is split into high and low-frequency bands. The rotation effect is created by a synchronized combination of pitch shifting, tremolo, and panning. Like the physical cabinet, the high (horn) and low (rotor) frequencies are "spun" in opposite directions. Horn and rotor speeds are independent, and designed with acceleration and deceleration characteristics to simulate the inertia of the original mechanical elements.

A virtual requirement for organ music, **Rotary** also sounds remarkable with guitar and electric piano rhythm parts. In fact, these programs are great alternatives to the **Chorus** and **Tremolo** effects for any sound source.

Vibrato - *Stereo (Wet Only)*

Vibrato is obtained by smoothly varying the pitch of the signal just sharp and flat of the original at a determined rate.

Pitch Shift - *Stereo*

This effect shifts the frequency spectrum of the input signal. Altering the pitch of a sound produces a wide range effects - from subtle detunes to full interval shifts up or down a two octave range. The MX300's **Pitch Shift** effect is a chromatic shifter, meaning all notes of the scale are shifted by the same interval. **Pitch Shift** is very useful with guitar tracks, monophonic synth lines, or where special vocal effects are needed.

Detune - *Stereo*

Detune adds a slightly pitch-shifted version of the original source, thickening the sound. This creates a particularly effective simulation of "double-tracking." This effect is also a great alternative to the **Chorus** effect, adding the richness of a chorus without the audible sweep caused by the chorus rate.

Modulated Effect Controls

Speed
Sets the speed at which the modulated effect cycles.

Depth
Scales the intensity of the effect. This control affects the output of the LFO only. It has no effect on the outputs of the individual waveforms.

Voices
Controls the number of additional Chorus voices.

Regen
Controls the amount of modulated signal being fed back into the input, creating feedback. Higher amounts add more resonance to the signal.

Diffusion
Creates a time-smoothing effect similar to diffusion in reverb. Diffusion can be a subtle effect to add a little warmth to the chorus.

PreDelay
Determines the amount of offset between the two signals that create the flange effect. Lower values create a tighter effect, higher values result in a more extreme "whooshing" sound.

Waveform
Selects the wave pattern used by the modulated effect.

Phase
Controls whether amplitude or depth change occurs in both left and right outputs simultaneously or alternates between left and right outputs.

Phase Stages
Selects between a 4, 8, or 12 state phase shifter.

Stereo Spread
Increases or decreases the stereo imaging of the Rotary effect.

Drive
Provides overdrive gain to the preamp section of the rotary speaker effect.

Minimum Speed
Sets the minimum speed at which the effect will oscillate.

Maximum Speed
Sets the maximum speed at which the effect will oscillate.

Doppler
Increases or decreases the Doppler pitch effect that is created by the physics of a rotating speaker.

Shift 1 & 2
Determines the amount of pitch shift or detune shift from the original signal source. Works best with individual notes.

Delay 1 & 2
Sets the delay time before the pitch shift or detune effect is heard in the Pitch Shift and Detune effects.

Feedback 1 & 2
Adjusts how much of the shifted signal is sent back through the delay line in Pitch Shift and Detune for creating cascading arpeggio type effects.

Pan 1 & 2
Sets the pan position in the stereo field for each tap in the 2-Tap Delay.

MX300 SYSTEM MENUS

SYSTEM MENUS

The MX300 System menus are where global settings are configured. These include Program Auto Load, Output Level, and Factory Restore. Changes made to these settings affect all programs. Press the **System** button to access these menus. Turn the **Page/ Select** knob to scroll up and down through the available menus. Press the **Exit** button to exit the System Menus.

Bypass Select

There are four different bypass options for effects and programs (turn **Knob A** to select):

Dry – the inputs and outputs of the effects are muted but dry signal is passed around them.
Mute – The inputs, outputs and dry signal paths are all muted leaving no signal at the outputs.
Input Dry – The inputs to the effects are muted but reverb decay and delay tails will still finish. Dry signal will also be passed around the effects.
Input Mute – The inputs and dry paths around the effects are muted but reverb decay and delay tails will still finish.

Contrast

This utility adjusts the contrast of the **Main Display** to make it more visible at different viewing angles. Use **Knob B** to adjust the display's viewing angle to your liking.

Program Load

MX300 programs can be loaded manually or automatically as each program is selected. The default setting is Manual. Use **Knob C** to select which method of program loading you need.

Input Source

The MX300 has both analog and digital inputs. Depending on which inputs you will be using, you need to select between analog or digital audio

sources. The MX300 offers three different input sources to select from: **Anlg Mono L** (Left), **Anlg Stereo**, and **Digital**. Input Source refers to whether you will be using the analog Input pair or the S/PDIF digital input. When only a single analog input is to be used, connect to the analog Input Left input only and select **Anlg Mono L** as the Input Source. All inputs (analog and digital) can remain connected simultaneously in the event you find yourself switching between using both. Use **Knob A** to select the appropriate Input Source you will be using

Clock Source

This option allows manual selection of either the internal or external clock source for the MX300. When set to **44.1kHz**, the MX300 utilizes an internal clock with a 44.1kHz sample rate. When set to **48kHz**, the MX300 utilizes an internal clock with a 48kHz sample rate. When set to **Digital**, the unit utilizes the S/PDIF input clock source, even if an analog audio source is used. Refer to **The MX300 and Digital I/O** section on page 12 for more information on using digital audio sources. Use **Knob B** to select the appropriate Clock Source you will be using.

Digital Out

The MX300 can send unprocessed digital audio out its **S/PDIF Digital Output** while monitoring processed audio through the analog outputs. This is useful when you want to record a dry performance digitally, but also hear effects processing while you are recording. **Note**: This feature is only available for signals brought into the MX300 via the analog inputs. It has no effect on signals being received at the **S/PDIF In**. Digital in/out signals are processed normally regardless of whether the Digital Out settings are set to Dry. To send unprocessed audio out the MX300 digital outputs, use **Knob C** to set the **Digital Out** option to Dry.

Analog Output

The MX300 analog outputs can be configured to run in stereo or in mono. When only a single output cable is to be used, connect to the **Output Left** output only and set the Analog Output Mode to **Anlg Mono L**. Output Mode only affects the analog outputs. Use **Knob A** to select between **Anlg Mono L** and **Anlg Stereo**.

Analog Out Level

The MX300 outputs can be optimized to run with equipment requiring different output levels. High end audio systems run at +4dBu levels while many inexpensive system levels run at –10dBV levels. Consult the technical guides that came with the equipment you will be connecting the MX300 to so as determine which output level should be selected. Use **Knob B** to change between –10dBV or +4dBu.

Tempo Display

MX300 programs can display delay time in two types of units, ms (milliseconds) and BPM (beats per minute). Use **Knob C** to select which units you want all programs to display delay times in.

MIDI Channel

The MX300 is equipped with a MIDI receive channel for receiving incoming MIDI program changes and CC messages. The MIDI Channel can be set from **1-16**, **All** channels, or **Off**. Use **Knob A** to change MIDI Channel A settings.

MIDI Program Receive

The MIDI Program receive option lets you enable or disable the MX300 from receiving MIDI program change messages. Disabling MIDI Program Receive filters all program change messages so that the MX300 will not respond to them. MIDI CC messages are still received even when this option is disabled. Use the **Knob B** to change **MIDI Program Receive** options.

MIDI CC Receive

The MIDI CC Receive option lets you enable or disable the MX300 from receiving MIDI CC messages. Disabling MIDI CC Receive filters all MIDI CC messages so that the MX300 will not respond to them. MIDI program change messages are still received even when this option is disabled. Use the **Knob C** to change **MIDI Receive** options.

MIDI Clock Sync

The MX300's MIDI input is able to receive and synchronize delay times via MIDI clock messages. When set to **Sync**, Tap Tempo is changed by

incoming MIDI messages. (The **Tempo** button on the front panel will be disabled while these messages are being received.) When set to **Off**, the unit ignores MIDI Clock messages. Use the **Knob A** to change **MIDI Clock Sync** options.

Footswitch R/T

The MX300 features a footswitch input jack on the rear panel. This lets you connect the optional 2-button footswitch for remote control of some of the MX300's functions. These global footswitch functions are as follows:

Program Up	Processor 2 Bypass
Program Down	Tap Tempo 1
Program Bypass	Tap Tempo 2
Processor 1 Bypass	Tap Tempo 1/2

Adjust **Knobs B** and **C** to change the footswitch functions.

Factory Restore

The Factory Restore function erases all user programs and system settings and returns them to their factory state. To restore the MX300 to the factory state, follow these steps:

1. From the Factory Restore screen, turn **Knob A** until the **HOLD <STORE>** screen appears. Press the **Exit** button to abort the Factory Restore procedure.

2. Press and hold the **Store** button until the white progress bar has completely disappeared. This will complete the restore procedure and the MX300 will be returned to its factory state.

THE MX-EDIT™ EDITOR/LIBRARIAN - WINDOWS® AND MAC®

The included MX-Edit Editor/Librarian software lets you create, edit, compare, save and load reverb and effects programs for use with your MX300 on your Windows or Mac computer. While the MX300 has a finite number of User program locations, you can create and save as many programs as you like on your computer, and load them into your MX300 via a USB or MIDI connection at any time.

The Mac and Windows versions of the MX-Edit Editor/Librarian are almost identical in functionality. One noticable difference is the Editor window's position; it's fixed in the Windows version, and free-floating in the Mac version. For additional differences and features in the Mac version, refer to the readme.txt file on the CD.

INSTALLING THE MX-EDIT EDITOR/LIBRARIAN SOFTWARE - WINDOWS

MINIMUM SYSTEM REQUIREMENTS - WINDOWS

Before installing the MX-Edit Editor/Librarian software, make sure that your computer meets the following minimum requirements:

- Pentium-III, 500 MHz or better. (1.2 GHz recommended)
- Windows XP, Service Pack 2 or higher, .NET 2.0 installed
- 512 MB RAM (1 GB recommended)

To install the included MX-Edit Editor/Librarian software in Windows XP, insert the provided disc into your computer's CD-ROM drive. You will be guided through the installation process – just follow the on-screen instructions and prompts. Note that you will be prompted to connect the MX300 via the USB port during the installation process. In order for your computer to recognize the MX300 connection, it is necessary to have the MX300 powered on and connected via a standard USB cable.

Important: If you do not have the MX300 plugged in and turned on when the install program runs, installation may fail. You may need to run the installation program again after connecting the MX300. Also note that you can re-run the installation program in Modify mode, which is useful for installing drivers on a different USB port than the port originally connected to. This can be done with the disc, or via the Control Panel's Add/Remove Programs option (in Windows).

INSTALLING THE MX-EDIT EDITOR/LIBRARIAN SOFTWARE - MAC

MINIMUM SYSTEM REQUIREMENTS - MAC

Before installing the MX-Edit Editor/Librarian software, make sure that your computer meets the following minimum requirements:

- OSX 10.4.x
- Power PC or Intel® G4, G5 processor

- 800 MHz (1.2 GHz recommended)
- 512 MB RAM (1 GB recommended)

To install the MX-Edit and Audio Units software for Macintosh® computers, insert the provided disc into the CD-ROM drive and double-click on the disc icon when it appears. Double-click on the ***MX300.dmg.hqx*** file to extract and run the installer. Follow the on-screen prompts to install the software.

The installer sets up the standalone **MX-Edit Editor/Librarian** application in the Applications folder and the **MX-Edit Audio Unit** in the Components folder.

QUICK START

When you first open MX-Edit, you will see the MX-Edit Library on the left side of the MX-Edit window, with the MX300 icon at the top of the Library. An editor panel for the current program is also open.

Double-click the MX300 icon to expand the Library, then double-click the Factory or User icons to see the Factory or User program lists. The Factory list will always be the same, as Factory programs cannot be changed; the User program list will represent the programs currently residing in the User program locations in your MX300 hardware.

Double-click a program name to open it in the editor. The program settings are reflected in the Parameter knobs and buttons in the Program Editor window.

The selected program is now loaded in your MX300. Any changes made in the MX-Edit Program Editor window will also occur simultaneously on the MX300 hardware.

THE MX-EDIT™ LIBRARY

The MX-Edit Library contains the Factory and User programs that are currently loaded in your MX300. When you first open MX-Edit, it communicates via USB (or MIDI) with the MX300 hardware, and populates the Library with all the information about each of the Factory and User programs stored in MX300's physical memory.

To view programs in the Library window, click the MX300 tab in the upper left corner, then double-click the Factory or User icon to expand the Library and see the Factory or User program lists. The Factory list is always the same, as Factory programs cannot be overwritten; the User program list represents the User programs currently saved in your MX300 hardware.

The Library can support multiple MX300 devices at the same time. Each device that is connected to the Library is represented by a name and an icon next to the tool bar (just below the menus). To view, load, and edit programs for a device, click its icon.

EDITING A PROGRAM

To open a program, choose one of the following:

- To open a **Factory** or **User** program from the MX-Edit Library, double click on that program number in the Library window.
- To open a program that has been saved to your computer (but doesn't appear in the MX-Edit Library), click **File** and select **Open Program**. By default, the **Open** dialog looks in the **My Documents** folder (or the last folder that a program was opened from). Double-click the program to load it.
- To open a program with the currently active settings from the MX300, select **Open Current Program** in the **Device** menu. This will retrieve all current settings from the MX300, and display those settings in the Program Editor panel.

THE MX-EDIT™ PROGRAM EDITOR

The MX-Edit Program Editor lets you quickly and easily view, compare and edit any program stored in the MX300, or programs saved to your computer.

MX-Edit gives you all the same control and functionality as the MX300 front panel, with the exception of **Input** control and **System** functions.

All changes that you make in the active Program Editor window are reflected in real-time on the MX300. MX-Edit and the MX300 are fully interactive, so any changes made on the MX300's front panel are reflected in real-time in the MX-Edit Program Editor window as well.

When you open a program, the MX-Edit Program Editor is updated with the selected program's name in the Program Name field, and you're prompted to save any previous edits. The settings of the loaded program are reflected in the Parameter knobs and buttons, and are loaded into the MX300 hardware.

SIGNAL ROUTING OPTIONS

To change the MX300's **Routing**, left click on the **Routing** button in the **Input/ Routing** control area. A list of the MX300's **Routing** options appears, with a check mark next to the currently selected routing. Highlight an item in the list and left click to select and load it. A routing diagram appears next to the **Routing** button, and the routing name is shown in the button.

REVERB/EFFECT SELECTION BUTTONS

Reverb/Effect Selection Buttons

To change a reverb or effect in Processor 1 or Processor 2, left click on the **Reverb/ Effect Select** button in Effect 1 or Effect 2 control area. A list of the MX300's reverbs and effects appears, with a check mark next to the currently selected reverb or effect. Highlight an item in the list and left click to select and load it. Notice that the reverb

or effect name now appears in the **Reverb/Effect Select** button, and the Parameter knobs in MX-Edit change position, layout, and number, depending on the default values for the selected reverb or effect.

ADJUSTING KNOBS

To make editing in MX-Edit easy and intuitive, there are three ways to adjust knobs in MX-Edit:

Mouse - Circular

Place the cursor at the outer (shadowed) edge of a knob, then click and hold the left mouse button. The white indicator line on the knob jumps to the mouse cursor's position, and follows the cursor as it moves around the circumference of the knob. To make fine adjustments, continue to hold the left mouse button down and move the cursor away from the knob; the white line still follows the cursor, no matter how far away it is from the knob. (Note that this control does not apply to Macs; hold the Option key to make fine adjustments.)

Mouse – Up / Down

Move the mouse cursor to the center of a knob; the knob is highlighted, and the cursor changes to a double-headed arrow, pointing up and down. Click and hold the left mouse button, causing the cursor to disappear. Move the mouse up to turn the knob higher, or move the mouse down to turn the knob lower. For very fast edits, press and hold the Ctrl key on your computer keyboard while moving the mouse; this multiplies the adjusted value by a factor of 10 (Windows® only).

Arrow Keys

Highlight, then left-click on a knob to select it. Use the up (or right) arrow key to turn the knob higher and increase the value; use the down (or left) arrow key to turn the knob lower, decreasing the value. This is a very effective method for making small adjustments to fine-tune your settings. For faster modifications, press and hold the Ctrl key on your computer keyboard while pressing an arrow key to multiply each adjustment by a factor of 10 (Windows only).

TEMPO

If one of the MX300's delays is selected, the **Tempo** button in that processor becomes active, and begins to flash at the Tempo rate. The tempo value is shown in milliseconds (ms), and a musical note appears next to the displayed Delay Time. When the Delay Time parameter is adjusted, exact divisions of time in milliseconds relative to the flashing Tempo rate will cause a note value to be displayed next to the time, e.g. 16th note, dotted-8th note, etc. The **Tempo** button will continue to flash at the originally selected tempo, but the delay taps will occur at the rate displayed in the Delay Time value.

To change the tempo value, simply place the mouse cursor over the **Tempo** button, and left-click twice to tap the tempo, just as you would on the MX300 front panel. The **Tempo** buttons on the MX300 and in the Program Editor window now flash at the new tempo.

If a non-delay effect is loaded in the processor, the **Tempo** button is dimmed and inactive.

BYPASS

To engage the **Bypass** button (and turn off the selected effect), place the mouse cursor over the **Bypass** button, and left-click to bypass that processor.

PROGRAM NAME

To create or change a program's name, simply left click once anywhere in the Program Name field. The program name will be highlighted; type the new name into the text box.

SAVING A PROGRAM

If you make any changes to a program, an asterisk (*) will appear next to the program name in the Title Bar when the Program Editor is active. The LED on the Store button on the MX300's front panel also illuminates, indicating a change from the loaded program.

To save a program to disk, click File and select **Save** or **Save As**, and enter a file name. By default, programs are saved to your computer in the ***My Documents*** folder; to choose a different location, simply navigate to a different folder or create a new folder in which to save your MX300 program files. (For example, ***C:\Documents and Settings\username\My Documents\MX300 Presets***). Click the **Save** button to complete the process.

You can also save a program simply by closing the Program Editor window. If any changes have been made to the loaded program, a dialog box appears, asking if you want to save your changes. Click **Yes** to save the changes, **No** to close without saving, or **Cancel** to return to the Program Editor window. If you choose this method to save your changes, the current program will be over-written; to save the program as a new file with a different name (and keep the loaded program's settings intact), click **File** then **Save As**.

MX300 programs are given the file extension .MX300p, and they can be copied, moved, attached to emails – anything you can do with a standard document or file. These files should, however, only be opened by MX-Edit Editor/Librarian software to prevent corruption.

STORING A PROGRAM

To store a program into one of the User program locations in the MX-Edit Library (and the corresponding location in the MX300's physical memory), open the program you wish to store. With the Program Editor window active, click **Device**, then **Store Program**. The **Store to Device** dialog appears, allowing you to choose the User program location and program name to store with it. Be aware that storing a program in this manner will over-write the program previously stored in that location, both in the MX-Edit Library and the MX300 itself. Click **Save** to store to the selected User program location. To cancel the operation, click **Cancel**, or close the **Store to Device** dialog box.

To rename a User program in the Library, right-click on its name in the Library window and select **Rename**. Type in the new name and press **Enter** to save the change.

Since the Factory programs can never be over-written, you cannot store to nor rename a Factory program location. You may edit a Factory program, but it must be stored to a User program location or to a file.

ARCHIVING

Archiving is a powerful tool for preserving the current state of your MX300. When you archive the MX300, all of its presets and global settings are sent to the computer and saved to a file. When an archive is restored, the MX300 is configured exactly how it was when you archived it. This allows you to not only create safety backups, but create unique configurations for various purposes. For example, you might want to create a setup specifically for that gig you're playing on the weekend, but still keep all your favorite studio presets intact. Use MX-Edit's Backup feature to archive the MX300's settings, then modify and store anything and everything you want, without worrying about reprogramming all your previous programs and settings.

To archive the MX300, click **Device** and select **Backup**. A warning will appear, advising you that a full Backup may take a few minutes, and asking whether you wish to proceed. To cancel without creating a Backup archive, click **Cancel** or close the dialog box. To proceed, click **OK**. A progress bar appears at the bottom of the MX-Edit screen, indicating that a Bulk Dump is in process. When all the MX300 data is received, a **Save** dialog box appears. The default file name is the current day and date (e.g. ***Backup Wednesday, January 24, 2007***) with the file extension .mx300a (MX300 Archive file) for Windows® and Mac®. Click **Save** to store the Backup Archive file.

To restore a saved archive, click **Device** and select **Restore**. When prompted, select an MX300 archive file, and click **Open**. MX-Edit then sends the MX300 archive to your MX300, replacing all the data in the hardware with the archived data.

Note: It is a good idea to create a new Backup archive file anytime you plan to restore the MX300 from a previous archive session.

USING THE MX300 AS A HARDWARE PLUG-IN

The MX300 comes with VST™ and Audio Units software which allows you to use the MX300 as a Hardware Plug-In. Now you have access to classic Lexicon® reverbs and effects within your software recording projects, with full automation and total recall, without burdening your CPU! Using the MX300 with the VST and Audio Units software works much like any other plug-in you'd use with a DAW, except that the audio is routed through the MX300 for the signal processing.

MINIMUM SYSTEM REQUIREMENTS

Audio

I/O hardware with a minimum of two inputs and two audio outputs.

Windows®

P-III, 500 MHz or better, WinXP Service Pack 2 or higher plus a VST-compatible Software Recording Package

Mac

OSX 10.4 or higher plus Audio Units compatible Software Recording Package

INSTALLING THE MX-EDIT HARDWARE PLUG-INS

Note: If you have already installed the MX-Edit™ software for Mac or WinXP, you have already installed the VST and/or Audio Units software. Simply skip this section.

FOR WINDOWS XP USERS

To install the software in Windows, insert the disc into your CD-ROM drive and follow the on-screen prompts. (If the Autorun feature is disabled, browse to the CD and double-click on the setup.exe file.)

FOR MAC USERS

To install on a Mac, insert the disc into your CD-ROM drive and double-click on the disc icon when it appears. Double-click on the MX300.dmg file to extract and run the installer. Follow the on-screen prompts to install the software.

CONNECTING THE MX300

USB CONNECTION

Make sure the MX300 is powered up and connected to your computer with a standard USB cable. (For Windows XP users, make sure the MX300 is plugged into the same USB port as when the software was loaded.)

AUDIO CONNECTIONS

To use the MX300 as a hardware plug-in, your computer needs audio hardware with multiple audio inputs and outputs available, at least enough to send and return two channels from the MX300 plus two additional outputs to monitor with.

For lower latencies and the best audio performance, it is recommended that you connect the MX300 to your computer's audio I/O device using the S/PDIF input and output. If your I/O device does not have a S/PDIF connection, or if it already connected to another device, you may use the analog connections from your computer's I/O device to the 1/4" analog inputs and outputs on the MX300.

Important: The MX300 accepts digital audio at 44.1kHz and 48kHz sample rates. Do not connect any digital device to the MX300's S/PDIF Input that transmits at any other sample rate (such as 96kHz). Doing so can cause unpredictable performance. Make sure your recording project is set to either 44.1kHz or 48kHz sample rate to avoid problems.

SOFTWARE CONFIGURATION

Because the audio is being processed within the MX300 hardware, and not inside your computer, your DAW (Digital Audio Workstation, or Recording Software) needs to be set up to send and receive audio to and from the MX300.

Many DAW's have built-in routing configurations for this; consult your software's documentation for information about setting up external routing options.

Steinberg® Cubase SX® users: see information on "External FX" connections.

Logic® Audio users: see information about "I/O Insert Plug-Ins."

Cakewalk® Sonar™ users: see information about "Adding Send / Return Effects to a Bus"

Note: The plug-in will fail to connect if the Lexicon MX300 Control MIDI port has been captured by the DAW. Check your DAW's MIDI device settings if you experience connection problems.

If your software does not provide specific information about these types of configurations, you can set up the connections yourself. Each recording platform will vary slightly, but the basic principles are the same.

TO SET UP A SEND AND RETURN PATH

1. Create a Stereo Bus (or two audio busses) that are different from your Main Mix (Master) Bus.
2. Route these busses to the outputs on your audio I/O hardware that you have connected to the MX300 (Either the S/PDIF output, or two analog outputs).
3. In your VST or Audio Units Send Effects Routing options, send the MX300's effect sends to the Stereo Busses (or Bus Pair) you created in Step 1.
4. Create two audio tracks whose inputs correspond to those you connected to the MX300 (Either the S/PDIF input, or two analog inputs).
5. Route these tracks to the Main Mix (Master) Bus.

If you have followed these steps correctly, when you open an instance of the MX300

plug-in, its audio path will lead it to the bus pair you created, which will send the audio to the MX300. The processed audio is then sent from the MX300 through your audio hardware's inputs to the two audio tracks you created in Step 4, and monitored through the Main Mix Bus, just as you would any audio or plug-in effect.

USING THE MX300 PLUG-IN WINDOW

In your DAW, open the Lexicon MX300 plug-in. You'll see an instance of the Program Editor window. You can use the MX300 plug-in software just as you would any other plug-in: Session Recall, automation – everything behaves just as any other VST™ or Audio Unit plug-in. The primary difference is that the audio processing occurs in the MX300 rather than on your computer. And, since the MX300 is a physical device, you can only open one instance (per physical device) of the plug-in window. If you attempt to open more than one plug-in window, the message shown below will appear.

This message will also appear if the MX300's MIDI ports are being used by the DAW or another application.

CONTROLS

The MX300's Plug-In window functions much like the MX-Edit Program Editor window described on page 37.

MIDI IMPLEMENTATION CHART

Function		Transmitted	Recognized	Remarks
Basic Channel	Default Changed	X X	1 1-16, Omni, Off	
Mode	Default Messages Altered	 X	Mode 2 X X	
Note Number	True Voice	X	X	
Velocity	Note ON Note OFF	X X	X X	
After Touch	Keys Channels	X X	X X	
Pitchbend		X	X	
Control Change		X	1-127	See MIDI CC list
Program Change	True #	X	0-98 = 1-99	See Program Mapping
	Bank Select	X	0	MIDI CC 32 Value 0 = Factory, Value 1 = User
System Exclusive		0	0	Lexicon Editor Only. Sys Ex channel follows MIDI channel except when MIDI channel is set to Off, where Sys Ex channel then receives on all channels.
System Common	Song Position Song Select Tune	X X X	X X X	
System Real Time	Clock	X	0	MIDI clock can set Delay Tempo.
	Commands	X	X	

0 = Yes
X = No

Mode 1: OMNI ON, POLY
Mode 3: OMNI OFF, POLY

Mode 2: OMNI ON, MONO
Mode 4: OMNI OFF, MONO

MIDI CC MAP - *ROUTINGS 1-4, DUAL STEREO EFFECTS*

	MIDI CC #				
Effect 1/2	**14/21**	**15/22**	**16/23**	**17/24**	**18/25**
Small Hall	Pre Delay	Decay / Mid RT	Liveliness		
Large Hall	Pre Delay	Decay / Mid RT	Liveliness		
Small Plate	Pre Delay	Decay / Mid RT	Liveliness		
Large Plate	Pre Delay	Decay / Mid RT	Liveliness		
Chamber	Pre Delay	Decay / Mid RT	Liveliness		
Room	Pre Delay	Decay / Mid RT	Liveliness		
Studio	Pre Delay	Decay / Mid RT	Liveliness		
Ambience	Pre Delay	Decay / Mid RT	Liveliness		
Vocal Hall	Pre Delay	Decay / Mid RT	Liveliness		
Vocal Plate	Pre Delay	Decay / Mid RT	Liveliness		
Drum Hall	Pre Delay	Decay / Mid RT	Liveliness		
Drum Plate	Pre Delay	Decay / Mid RT	Liveliness		
Arena	Pre Delay	Decay / Mid RT	Liveliness		
Gated	Pre Delay	Decay	Diffusion		
Reverse	Pre Delay	Decay	Diffusion		
Spring	Pre Delay	Decay	Boing		

Studio Delay	Tempo	Delay Time	Feedback	Ducker Threshold	Tap Tempo
Mono Delay	Tempo	Delay Time	Feedback	Ducker Threshold	Tap Tempo
Tape Delay	Tempo	Delay Time	Feedback	Smear	Tap Tempo
Pong Delay	Tempo	Delay Time	Feedback	Tap Ratio	Tap Tempo
Modulated Delay	Tempo	Delay Time	Feedback	Modulation Depth	Tap Tempo
Reverse Delay	Tempo	Delay Time	Feedback	Smear	Tap Tempo

Chorus	Speed	Depth	Voices
Flanger	Speed	Depth	Regen
Phaser	Speed	Depth	Regen
Tremolo / Pan	Speed	Depth	Phase
Rotary	Speed	Doppler	Stereo Spread
Vibrato	Speed	Depth	Phase
Pitch Shift	Shift Amount	Down/Up Shift	High Pass Filter
Detune	Shift Amount	Shift Amount	Stereo Spread
De Esser	Ratio	Frequency	Bandwidth
Compressor	Ratio	Threshold	Gain

Effect 1/2	**12/19**	**13/20**	**26/27**	**28**
	Effect Type	Bypass	Mix	Routing

MIDI CC MAP - *ROUTING 5, STEREO EFFECTS*

	MIDI CC #				
Effect	**14**	**15**	**16**	**17**	**26**
Hall Reverbs	Pre Delay	Mid RT	Size	Shape	
Plate Reverbs	Pre Delay	Mid RT	Size	Shape	
Chamber Reverb	Pre Delay	Mid RT	Size	Shape	
Room Reverb	Pre Delay	Mid RT	Diffusion	Shape	
Ambience Reverb	Pre Delay	Size	Diffusion	Shape	
Gated / Reverse Reverb	Pre Delay	Decay	Diffusion		
Spring Reverb	Pre Delay	Decay	Boing		
Stereo Studio Delay	Tempo	Delay Time	Feedback	High Pass Filter	Tap Tempo
Mono Delay	Tempo	Delay Time	Feedback	High Pass Filter	Tap Tempo
Pong Delay	Tempo	Delay Time	Feedback	High Pass Filter	Tap Tempo
2-Tap Delay	Tempo	Delay Time	Feedback	Delay Type	Tap Tempo
Modulated Delay	Tempo	Delay Time	Feedback	High Pass Filter	Tap Tempo
Tape / Reverse Delay	Tempo	Delay Time	Feedback	Pan	Tap Tempo
Chorus	Speed	Depth	Voices	Pre Delay	
Flanger	Speed	Depth	Regen	Waveform	
Phaser	Speed	Depth	Regen	Waveform	
Tremolo/Panner	Speed	Depth	Phase	Waveform	
Rotary	Speed	Stereo Spread	Drive	Rotor Minimum	
Vibrato	Speed	Depth	Phase	Waveform	
Pitch Shift / Detune	Shift 1	Delay 1	Feedback 1	Shift 2	
DeEsser	Ratio	Frequency	Bandwidth		
Compressor	Ratio	Threshold	Gain	Attack	

Effect 1	**12**	**13**	**27**	**28**
	Efffect Type	Bypass	Mix	Routing

Effect 1	**29**	**30**	**31**
	Assign A	Assign B	Assign C

MIDI CC MAP- *ROUTING 5, STEREO EFFECTS (continued)*

	MIDI CC #							
Effect	**18**	**19**	**20**	**21**	**22**	**23**	**24**	**25**
Hall Reverbs	Spread	RT High Cut	High Cut	Bass Boost Freq	Bass Boost	Diffusion	ER Time	ER Level
Plate Reverbs	Spread	RT High Cut	High Cut	Bass Boost Freq	Bass Boost	Diffusion	Feedback Delay	Feedback Level
Chamber Reverb	Spread	RT High Cut	High Cut	Bass Boost Freq	Bass Boost	Diffusion	ER Time	ER Level
Room Reverb	Spread	RT High Cut	High Cut	ER Time	ER Level			
Ambience Reverb	Spread	RT High Cut	High Cut					
Stereo Studio Delay	Low Pass	Ducker Level	Ducker Thresh					
Mono Delay	Low Pass	Ducker Level	Ducker Thresh	Pan				
Pong Delay	Low Pass	Ducker Level	Ducker Thresh	Tap Ratio	Tap Swap			
2-Tap Delay	Tap 1	Level 1	Pan 1	Tap 2	Level 2	Pan 2		
Modulated Delay	Low Pass	Mod Depth						
Tape / Reverse Delay	Smear							
Chorus	Waveform	Diffusion	High Pass Filter					
Flanger	PreDelay	Phase						
Phaser	Phase							
Rotary	Rotor	Horn Minimum	Horn Maximum	Doppler				
Pitch Shift / Detune	Delay 2	Feedback 2	Pan 1	Pan 2				
Compressor	Release	Knee						

PROGRAMS

	Preset Name	Routing		Preset Name	Routing
1	Orchestral	Stereo	26	Big Chamber	Stereo
2	Small But Large	Stereo	27	Small Chamber	Stereo
3	Gothical	Stereo	28	Dry Chamber	Stereo
4	ConcertVerb	Stereo	29	Small Room	Stereo
5	Fan Tastic	Stereo	30	Brick House	Stereo
6	Wide Load	Stereo	31	The Spacialist	Stereo
7	Realism	Stereo	32	60's GuitarVerb	Stereo
8	Tight Plate	Stereo	33	Ambiverb	Stereo
9	Live Hall	Stereo	34	Sizzlin	Stereo
10	Vocality	Stereo	35	Smallis Hallis	Stereo
11	Male Vocal	Stereo	36	Metallic	Stereo
12	Big Wide Vocal	Stereo	37	In Reverse	Stereo
13	Choir Plate	Stereo	38	Solo Plate	Stereo
14	Omenlike Vocal	Stereo	39	Very Small Hall	Stereo
15	Vocalized	Stereo	40	Long GateVerb	Stereo
16	Acoustic Plate	Stereo	41	RetroVerb	Cascade
17	AC Chamber	Stereo	42	Chorus + Plate	Mono Split
18	AC Room	Stereo	43	Vocal Hall+Plate	Mono Split
19	AC Ambience	Stereo	44	Tuned Room	Cascade
20	Big Snare	Stereo	45	EchoVerb	Cascade
21	Poppy Snare	Stereo	46	Acoustic Chamber	Cascade
22	Kick Thunder	Stereo	47	Ambient Chamber	Mono Split
23	Percusso Plate	Stereo	48	Acoustic Bliss	Mono Split
24	Snare Plate	Stereo	49	Springtime	Cascade
25	Slappy Snare	Stereo	50	Extra Roomy	Cascade

	Preset Name	Routing		Preset Name	Routing
51	Quickie	Cascade	76	Brewed Awakening	Dual Mono
52	Guitar World	Cascade	77	Jet Flange	Cascade
53	'60s Delay	Cascade	78	Phaser Taser	Cascade
54	Vocal Chorus	Cascade	79	The Low Down	Dual Mono
55	Choral Hall	Cascade	80	And Then Some	Cascade
56	Tape Chorus	Cascade	81	Gated Snare	Parallel
57	Plate + Hall	Dual Mono	82	Snare Delay	Cascade
58	Vocal + Inst 1	Mono Split	83	Drum Delay	Cascade
59	Vocal + Inst 2	Mono Split	84	Drum Echo	Cascade
60	Vocal + Inst 3	Mono Split	85	Tempo Gate	Cascade
61	Alive N' Kicking	Mono Split	86	Snare + Toms	Mono Split
62	Muy Grande	Dual Mono	87	Drum Plate+Hall	Mono Split
63	Taps	Cascade	88	Vibraslap	Dual Mono
64	Tap Chamber	Cascade	89	Vibrato	Mono Split
65	Spaced Out	Cascade	90	Spin Cycle	Cascade
66	Tried And True	Mono Split	91	Role Reversal	Cascade
67	Spring Studio	Mono Split	92	Get Some	Parallel
68	Hit Me	Cascade	93	Rewind	Cascade
69	Modulated Delay	Cascade	94	Back At Ya	Mono Split
70	Rock Lead	Mono Split	95	Delay Wars	Mono Split
71	Mod U Verb	Cascade	96	Pitch Out	Cascade
72	Roto Verb	Cascade	97	Huh?	Cascade
73	Hammond Delay	Cascade	98	Voice of Evil	Cascade
74	Vibrolux	Dual Mono	99	Wayback Machine	Cascade
75	Wobblers	Mono Split			

SPECIFICATIONS

Analog Audio Inputs

Connectors	two XLR and two ¼" TRS balanced or unbalanced
Impedance	50k Ohms bal., 25k Ohms unbal.
Input Level	+4 dBu nominal, +24 dBu maximum
A/D Conversion	24-bit, 48kHz or 44.1kHz, 128 x oversampling

Analog Audio Outputs

Connectors	two XLR and two ¼" TRS balanced or unbalanced
Impedance	2k Ohms bal., 1k Ohms unbal.
Output Level	+4 dBu or –10 dBV nominal (software adjustable), 24 dBu maximum
D/A Conversion	24-bit, 48kHz or 44.1kHz, 128 x oversampling

Analog Audio Performance (Effects Bypassed)

Frequency Response	10 Hz – 20kHz +0 dB/–0.5 dB
THD+N	<0.0019% 10Hz – 20kHz
Dynamic Range	>109 dB (A-weighted) A/A
Crosstalk	typical < –80 dB 20Hz – 20kHz

Digital Input and Output

Connectors	RCA phono (S/PDIF)
Format	S/PDIF 24-bit
Sample Rate	44.1 or 48kHz
Frequency Response	10Hz to 22kHz ±0.5 dB @ 48kHz

Control Interface

USB	USB 1.1 for MX-EDIT™ Editor/Librarian and VST™/Audio Units plug-ins
MIDI	In/Out 5-pin DIN
Foot Pedal	¼" TRS phone jack

General

Power	117 VAC or 230 VAC, 18 Watts
Size (W/H/D)	19" x 1.75" x 7.25"*/6.375" (483 x 44 x /185mm*/162 mm)
Weight	5.8 lbs (2.6 kg)

* Including knobs.

Harman Music Group
8760 South Sandy Parkway | Sandy, Utah 84070
U.S.A.

Phone: (801)-568-7660 | Fax: (801)-568-7662
MX300 Stereo Reverb Effects Processor
Questions or comments?
Email us at: customer@lexiconpro.com

Copyright 2007 Lexicon

A Harman International Company

Part Number: 18-0473-A