3 MkII SERIES

POWERED STUDIO MONITORS

Owner's Manual

JBL PROFESSIONAL by HARMAN

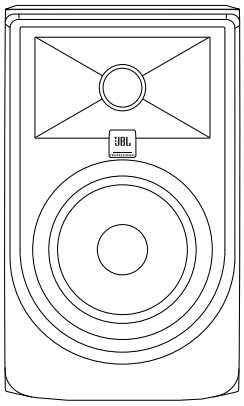

305P MkII
5" Powered
Studio Monitor

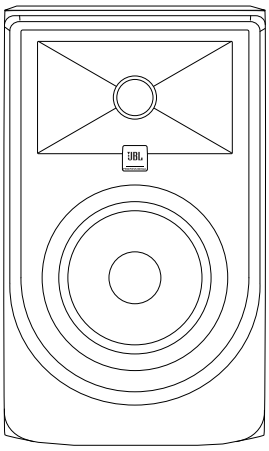

306P MkII
6" Powered
Studio Monitor

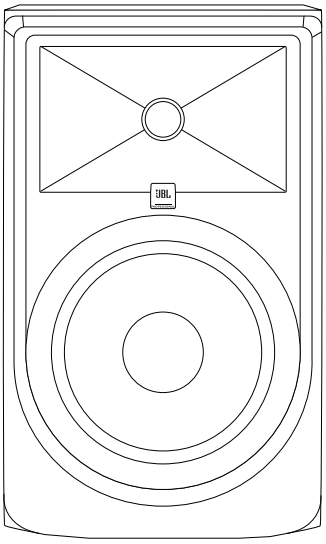

308P MkII
8" Powered
Studio Monitor

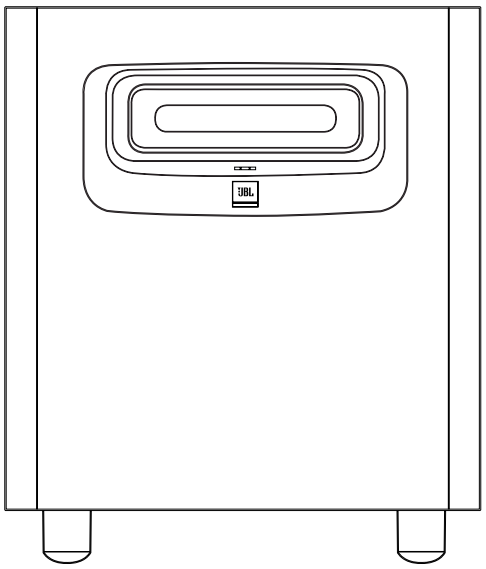

LSR310S
10" Powered
Studio Subwoofer

Product Registration

Thank you for your purchase of JBL 3 Series Studio Monitors

To receive important information as it becomes available, please take a moment to register your 3 Series speakers at ***www.jblpro.com/registration***.

Table of Contents

Section 1: Important Safety Instructions 4

Section 2: Introduction 5
- JBL Linear Spatial Reference (LSR) Design 5
- Image Control Waveguide 5
- 305P, 306P, and 308P MkII Features 5
- LSR310S Powered Studio Subwoofer Features 6
- JBL Professional Reliability 6

Section 3: Setting Up Your System 7
- Each 3 Series Carton Includes the Following Items: 7
- Unpacking 7
- Placement 7
- Audio Connections 9
- LSR310S Powered Studio Subwoofer Connections 9
- Power Connections 9
- Making Sound 9

Section 4: 305P, 306P, and 308P MkII Powered Studio Monitors 10
- Features 10
- Input Panel 11
- Audio Connections 11
- Auto Standby Feature 12

Section 5: LSR310S Powered Studio Subwoofer 13
- Features 13
- Input Panel 14
- Audio Connections 15
- Setting the Subwoofer Level 15
- Placement and Polarity Setting 15
- Crossover Settings and Bass Management 16
- Surround Sound Systems and LFE 16

Section 6: System Connections 17
- Two Channel Systems 17
- Surround Sound Systems 18

Section 7: Troubleshooting 19

Section 8: Specifications 20

Section 9: JBL Service Contact Information 21

Section 10: Product Warranty Information 22

Section 1: Important Safety Instructions

1. READ these instructions.
2. KEEP these instructions.
3. HEED all warnings.
4. FOLLOW all instructions.
5. DO NOT use this apparatus near water.
6. CLEAN ONLY with dry cloth.
7. DO NOT block any ventilation openings. Install in accordance with the manufacturer's instructions.
8. DO NOT install near any heat sources such as radiators, heat registers, stoves, or other apparatus (including amplifiers) that produce heat.
9. DO NOT defeat the safety purpose of the polarized or grounding type plug. A polarized plug has two blades with one wider than the other. A grounding type plug has two blades and a third grounding prong. The wider blade or the third prong are provided for your safety. If the provided plug does not fit into your outlet, consult an electrician for replacement of the obsolete outlet.
10. PROTECT the power cord from being walked on or pinched, particularly at plugs, convenience receptacles, and the point where they exit from the apparatus.
11. ONLY USE attachments/accessories specified by the manufacturer.
12. USE ONLY with a cart, stand, tripod, bracket, or table specified by the manufacturer, or sold with the apparatus. When a cart is used, use caution when moving the cart/apparatus combination to avoid injury from tip-over.
13. UNPLUG this apparatus during lightning storms or when unused for long periods of time.
14. REFER all servicing to qualified service personnel. Servicing is required when the apparatus has been damaged in any way, such as power-supply cord or plug is damaged, liquid has been spilled or objects have fallen into the apparatus, the apparatus has been exposed to rain or moisture, does not operate normally, or has been dropped.
15. DO NOT expose this apparatus to dripping or splashing and ensure that no objects filled with liquids, such as vases, are placed on the apparatus.
16. To completely disconnect this apparatus from the AC Mains, disconnect the power supply cord plug from the AC receptacle.
17. Where the mains plug or an appliance coupler is used as the disconnect device, the disconnect device shall remain readily operable.
18. DO NOT overload wall outlets or extension cords beyond their rated capacity as this can cause electric shock or fire.

The exclamation point, within an equilateral triangle, is intended to alert the user to the presence of important operating and maintenance (servicing) instructions in the literature accompanying the product.

The lightning flash with arrowhead symbol within an equilateral triangle is intended to alert the user to the presence of uninsulated "dangerous voltage" within the product's enclosure that may be of sufficient magnitude to constitute a risk of electrical shock to persons.

ESD Warning: The icon to the left indicates text regarding potential danger associated with the discharge of static electricity from an outside source (such as human hands) into an integrated circuit, often resulting in damage to the circuit.

WARNING: To reduce the risk of fire or electrical shock, do not expose this apparatus to rain or moisture.

WARNING: No naked flame sources – such as lighted candles – should be placed on the product.

WARNING: Equipment shall be connected to a MAINS socket outlet with a protective earthing connection.

CAUTION: To reduce the risk of electric shock, grounding of the center pin of this plug must be maintained.

WARNING: This product is intended to be operated ONLY from the voltages listed on the back panel or the recommended, or included, power supply of the product. Operation from other voltages other than those indicated may cause irreversible damage to the product and void the products warranty. The use of AC Plug Adapters is cautioned because it can allow the product to be plugged into voltages in which the product was not designed to operate. If you are unsure of the correct operational voltage, please contact your local distributor and/or retailer. If the product is equipped with a detachable power cord, use only the type provided, or specified, by the manufacturer or your local distributor.

WARNING: Do Not Open! Risk of Electrical Shock. Voltages in this equipment are hazardous to life. No user-serviceable parts inside. Refer all servicing to qualified service personnel.

Place the equipment near a main power supply outlet and make sure that you can easily access the power breaker switch.

FCC AND CANADA EMC COMPLIANCE INFORMATION:

This device complies with part 15 of the FCC Rules. Operation is subject to the following two conditions:

(1) This device may not cause harmful interference, and
(2) this device must accept any interference received, including interference that may cause undesired operation.

NOTE: This equipment has been tested and found to comply with the limits for a Class B digital device, pursuant to part 15 of the FCC Rules. These limits are designed to provide reasonable protection against harmful interference in a residential installation. This equipment generates, uses and can radiate radio frequency energy and, if not installed and used in accordance with the instructions, may cause harmful interference to radio communications. However, there is no guarantee that interference will not occur in a particular installation. If this equipment does cause harmful interference to radio or television reception, which can be determined by turning the equipment off and on, the user is encouraged to try to correct the interference by one or more of the following measures:

- Reorient or relocate the receiving antenna.
- Increase the separation between the equipment and receiver.
- Connect the equipment into an outlet on a circuit different from that to which the receiver is connected.
- Consult the dealer or an experienced radio/TV technician for help.

Approved under the verification provision of FCC Part 15 as a Class B Digital Device.

Caution: Changes or modifications not expressly approved by the manufacturer could void the user's authority to operate this device.

CAN ICES-3 (B)/NMB-3(B)

EU COMPLIANCE INFORMATION:

Hereby, Harman Professional declares that the equipment type JBL 305P MKII, 306P MKII, 308P MKII, bearing the CE Mark are in compliance with the following:

- European Union Low Voltage Directive 2014/35/EU
- European Union EMC Directive 2014/30/EU
- European Union Restriction of Hazardous Substances Recast (RoHS2) Directive 2011/65/EU
- European Union Eco-Design 1275/2008
- European Union Eco-Design 801/2013
- European Union Registration, Evaluation, Authorization and Restriction of Chemicals (REACH) Directive 1907/2006

The full text of the EU declaration of conformity is available at the following Internet address: *http://www.jblpro.com/www/product-support/downloads*

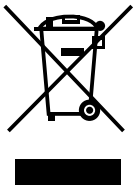

WEEE NOTICE:
This appliance is labeled in accordance with European Directive 2012/19/EU concerning waste of electrical and electronic equipment (WEEE). This label indicates that this product should not be disposed of with household waste. It should be deposited at an appropriate facility to enable recovery and recycling.

Section 2: Introduction

Congratulations on your purchase of JBL Professional 3 Series Studio Monitors. The 3 Series meet JBL's high standards for accuracy and long-term reliability in demanding professional applications. All 3 Series models incorporate JBL Professional transducer and network technologies to provide accurate frequency response, exceptional low frequency extension and high SPL capability. JBL Linear Spatial Reference (LSR) design ensures greater accuracy at the mix position in acoustically varied workspaces and production environments. Additionally, each speaker is equipped to interface with a range of signal sources, including high-output professional audio equipment.

JBL LINEAR SPATIAL REFERENCE (LSR) DESIGN

Because listening environments vary, JBL designed the 3 Series system using Linear Spatial Reference design criteria that improve accuracy at the listening position in a broad range of rooms. The key to accuracy is ensuring that not only the on-axis sound is neutral, but also the reflected sound reaching the mix position is neutral.

While most manufacturers take only a single on-axis measurement of the speaker's performance, Linear Spatial Reference design criteria requires 72 measurements, taken 360 degrees around the speaker, yielding 1,200 times more data. This data is used in the design of critical system components, enabling JBL to engineer complete systems that deliver smooth off-axis response. The result: clear, accurate sound at the listening position in any room.

IMAGE CONTROL WAVEGUIDE

JBL's revolutionary Image Control Waveguide gives the 3 Series Powered Studio Monitors remarkable imaging, a wide soundstage, and a solid "phantom center". Subtle details can be heard, even in a dense mix. As an added benefit, the Image Control Waveguide provides a broad "sweet spot", so you don't have to be seated directly in front of the speakers to hear accurate and natural and open sound.

305P, 306P, AND 308P MKII FEATURES

3 Series MkII models include a range of features to meet the needs of demanding audio production applications:

- The magnetically-shielded low frequency transducers in MkII models, equipped with 1.5" voice coils and robust motor structures fine tuned for increased linearity, deliver excellent low frequency performance. By reducing thermal-related effects, the 3 Series MkII Studio Monitors and LSR310S Subwoofer sound the same at low, medium, and high levels. The woofers are magnetically shielded to prevent interference with magnetically sensitive displays and equipment. The woofer's self-repairing dust dome is resistant to dents caused by fingers or external objects.
- JBL's patented Slip Stream™ low frequency port design works in concert with the woofer to produce deep bass response at any playback level. The double-flared shape of the port is precisely engineered for greater low frequency extension and reduced turbulence.
- The bi-amplified design, with individual power amplifiers for the low frequency and high frequency transducers, uses efficient high-output Class-D integrated power amplifiers to provide high SPL (sound pressure level).
- Magnetically-shielded soft dome high frequency transducers with optimally damped materials improve transient response and minimize distortion. By reducing distortion in the lower operating range, where the ear is most sensitive, these transducers reduce ear fatigue.
- Balanced XLR and ¼" input connectors.
- +4dBu / -10dBV INPUT SENSITIVITY switch allows connection to consumer-grade or high-output professional equipment without danger of input overload.
- Detented VOLUME attenuator allows fine adjustment of levels for a broad range of signal sources.
- HIGH FREQUENCY TRIM control to adjust the high frequency response to taste or compensate for acoustically reflective or absorptive listening environments.
- BOUNDARY EQ switch compensates for low-frequency acoustic anomalies that can occur when loudspeakers are in close proximity to walls.

LSR310S POWERED STUDIO SUBWOOFER FEATURES

Producing extended low frequency response into the 20Hz region, the LSR310S is the perfect match for the 3 Series MkII studio monitors. The LSR310S feature set includes:

- A Magnetically-shielded low frequency transducer, equipped with a 1.5" voice coil and robust motor structure for excellent low frequency performance. By reducing thermal-related effects, the 3 Series MkII Studio Monitors and LSR310S Subwoofer sound the same at low, medium, and high levels. The woofer is magnetically shielded to prevent interference with magnetically sensitive displays and equipment. The woofer's self-repairing dust dome is resistant to dents caused by fingers or external objects.
- A custom-designed down-firing, high-excursion 10" woofer with additional bucking magnet.
- A 200 watt Class-D power amplifier with abundant output and dynamic headroom for the most demanding production styles.
- The patented Slip Stream low frequency port, designed to work in concert with the 3 Series MkII woofers for accurate bass response at all playback levels.
- A detented VOLUME control, making it easy to balance the LSR310S with the studio monitor system.
- Balanced XLR and ¼" input connectors.
- Two XLR output connectors to add the LSR310S to any studio monitor system and extend its low frequency response.
- A +4dBu / -10dBV INPUT SENSITIVITY switch for connection to consumer or high-output professional equipment without danger of input overload.
- Three CROSSOVER settings:
    - **80Hz** – This setting implements high- and low-pass filters to create a seamless blend of the LSR310S with the 3 Series MkII studio monitors or other speaker system.
    - **XLF** – This special setting activates a 120Hz high-pass filter in conjunction with a low frequency tuning that approximates the tuning used in club playback systems. Using this setting, the bass output more than doubles.
    - **External** – The external setting bypasses all filtering, allowing use of an external active crossover.
- A protective limiting circuit allows the subwoofer to operate continuously at full output without failure.

JBL PROFESSIONAL RELIABILITY

Prior to becoming a production-ready design, each 3 Series model is subjected to JBL's tough 100-hour power test, in which the speaker is required to play continually at full output for 100 hours without failure. This demanding test ensures the 3 Series speakers will deliver years of reliable performance. To get the most out of the JBL 3 Series, please review this owner's manual and keep it on hand for future reference. Also, please register your new speakers at ***www.jblpro.com/registration***.

Section 3: Setting Up Your System

EACH 3 SERIES CARTON INCLUDES THE FOLLOWING ITEMS:

- One 3 Series MkII studio monitor or 3 Series subwoofer
- One power cord
- Quick setup guide
- Four peel-off rubber pads (305P, 306P, and 308P MkII models only)

UNPACKING

When removing a speaker from its packaging, we recommend the following procedure, which will prevent damage of the high frequency transducer:

305P, 306P, and 308P MkII models:

1. Remove the outer shipping carton, if one exists.
2. Place the inner carton on the floor with the top facing upwards.
3. Open the top of the box.
4. Without removing the internal packaging end-cap, gently rotate the carton so the open end rests on the floor and the bottom of the carton is facing you.
5. Gently lift the carton and allow the speaker and protective end-cap to slide out of the carton and remain on the floor.
6. Save the cartons and use the above procedure in reverse when you want to repack the units for shipment.

LSR310S subwoofer – The subwoofer weighs 19 kg (42 lbs). Unpacking the subwoofer does not require you to lift the subwoofer. However, you will need to rotate the subwoofer in the carton. If you are unable to perform the following steps without assistance, please request help from another person.

1. Remove the outer shipping carton, if one exists.
2. Place the carton on the floor with the bottom facing upward.
3. Open the bottom flaps of the carton and remove any protective packing materials from the bottom of the subwoofer. Open the bag that protects the subwoofer to expose the subwoofer's four feet.
4. Gently rotate the carton so the bottom is facing the floor and the four feet of the subwoofer are in contact with the floor.
5. Gently lift the carton and allow the subwoofer and protective packing materials to slide out and remain on the floor.
6. Remove the protective packing materials and documentation from the top of the subwoofer. Save the carton and use the above procedure in reverse when you want to repack the unit for shipment.

PLACEMENT

3 Series MkII Studio Monitors are designed to deliver exceptional imaging in any room. To get the most out of your speakers, follow these recommendations:

- Locate the four self-adhesive rubber pads supplied with the 305P, 306P, and 308P MkII speakers. Position and attach these to the bottom surface of the speaker close to each corner.
- Position each 305P, 306P, or 308P MkII Studio Monitor in a vertical orientation with the tweeter on top. Vertical orientation eliminates phase shift and acoustic cancellation of frequencies that can occur when the distance of the woofer to the ear is different from the distance of the tweeter to the ear.
- Angle the speakers so the high-frequency transducer in each speaker is aimed directly towards the ear of the listener.

- Ideally, 3 Series MkII Studio Monitors should be placed on suitable speaker stands, rather than on the work surface. This will reduce resonance and deterioration of low frequency performance caused by the speaker's mechanical coupling with the work surface.
- For optimum imaging, the left and right speakers should be placed symmetrically in the room, so each speaker is the same distance from adjacent walls and reflective surfaces.
- The speakers should be placed so the position of the listener and the two speakers form an equilateral triangle. Adjusting the distance between the speakers will affect the quality of bass heard at the listening position. You can experiment with speaker placement to find the placement that produces the preferred bass response, imaging, and—when listening to stereo material—produces a strong "phantom center", in which vocals and some instruments seem to originate from a point between speakers.
- The listening distance can be determined according to your preference, the acoustics of your room, and the maximum SPL (sound pressure level) you want to hear at the listening position. You can find the speaker's maximum SPL at 1 meter in the Specifications section at the end of this manual. Each doubling of listening distance will reduce the SPL at the listening position by as much as 6dB in an acoustically absorptive room, but only 3 or 4dB in an acoustically reflective room.

LSR310S subwoofer placement: The low frequency driver of the LSR310S is mounted on the bottom panel of the subwoofer. Before placing the subwoofer, make sure the position on the floor is free of any large objects that can interfere with or damage the woofer.

In a stereo system, the LSR310S subwoofer should be placed directly on the floor, located between the left and right speakers. In a surround sound system, the subwoofer can be located between the left and center or between the right and center channel speakers. The distance of the subwoofer from the listening position can be adjusted to produce the optimum bass in the system. Placing the subwoofer close to a wall or in a corner generally will increase the amount of bass heard in the room. Experiment to determine the Subwoofer placement that produces the best balance and quality of bass in the system.

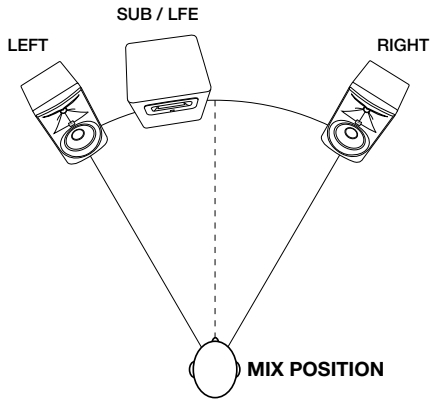

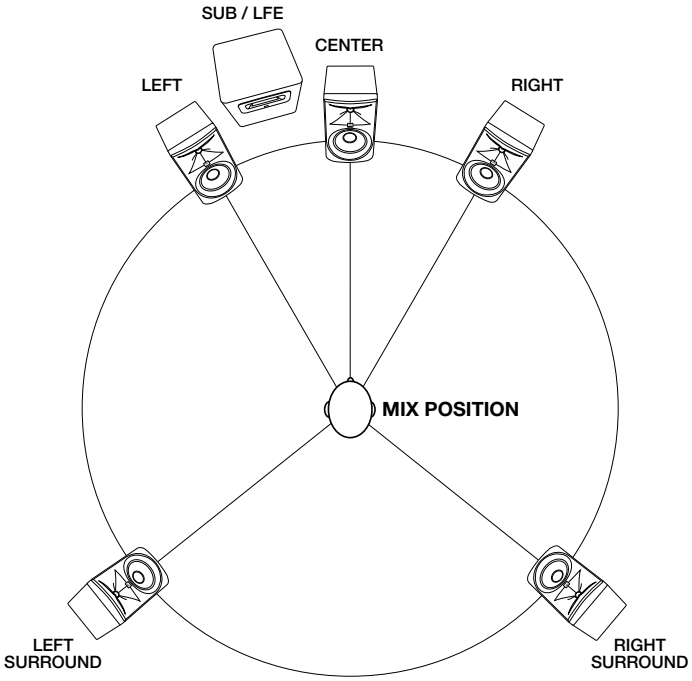

AUDIO CONNECTIONS

NOTE: Before making audio connections, ensure the VOLUME control on each 3 Series speaker/subwoofer is set to the full counter-clockwise (minimum) position.

The 3 Series speakers are equipped with balanced XLR and 6mm (¼") TRS inputs for connection to professional computer audio interfaces, mixing consoles, and audio production equipment, as well as unbalanced consumer audio products such as personal music players, consumer audio receivers, and audio visual equipment.

Connect professional equipment with balanced outputs to the XLR or 6mm (¼") TRS input of the speaker using balanced audio cables.

3 Series speakers are equipped with an INPUT SENSITIVITY switch, which is set to the -10dBV setting at the factory. This setting will be best for many applications. However, you should set the switch to the +4dBu setting under the following conditions:

- When connecting 3 Series speakers to professional equipment with +4dBu nominal output level. To determine the nominal output level of the connected equipment, consult the documentation supplied with the connected equipment.
- The sound is distorted, even when the speaker VOLUME controls are set to minimum settings

NOTE: When using the LSR310S in a system with 3 Series MkII Studio Monitors, set the INPUT SENSITIVITY switch on the 305P, 306P, or 308P MkII speakers to the -10dBV setting regardless of the LSR310S INPUT SENSITIVITY switch setting.

LSR310S POWERED STUDIO SUBWOOFER CONNECTIONS

The left and right outputs of the signal source should be connected directly to the LEFT IN and RIGHT IN connectors of the subwoofer. The LEFT OUT and RIGHT OUT connectors of the subwoofer should be connected to the inputs of the left and right speakers respectively.

POWER CONNECTIONS

Connect the included IEC power cable to each 3 Series speaker and subwoofer. The 3 Series speakers incorporate a universal power supply, allowing them to be used domestically and internationally. The ground terminal of the IEC plug is required by wiring codes and regulations and must always be connected to the electrical installation safety ground.

MAKING SOUND

1. Ensure the VOLUME control on each 3 Series speaker/subwoofer is set to the full counter-clockwise (minimum) position.
2. Power on the connected audio equipment (mixing console, computer audio interface, preamp, etc.).
3. Set the POWER switch on each 3 Series speaker/subwoofer to the ON position. After a short delay, the POWER LED on the front of each speaker will illuminate and the speakers will be ready to reproduce audio signals.
4. Play full range program material from the source with ample low frequency content so that you can properly judge the bass response of the system. Now slowly advance the volume control of the source device until its nominal operating level is achieved.
5. Slowly increase the VOLUME control on each 3 Series Studio Monitor until the desired listening level is achieved and all speakers are matched in output level to achieve a balanced image.
6. Balance the subwoofer in the system using the rear panel VOLUME control. Additional balance of bass can be achieved by changing the placement of the subwoofer in the room.

Front View

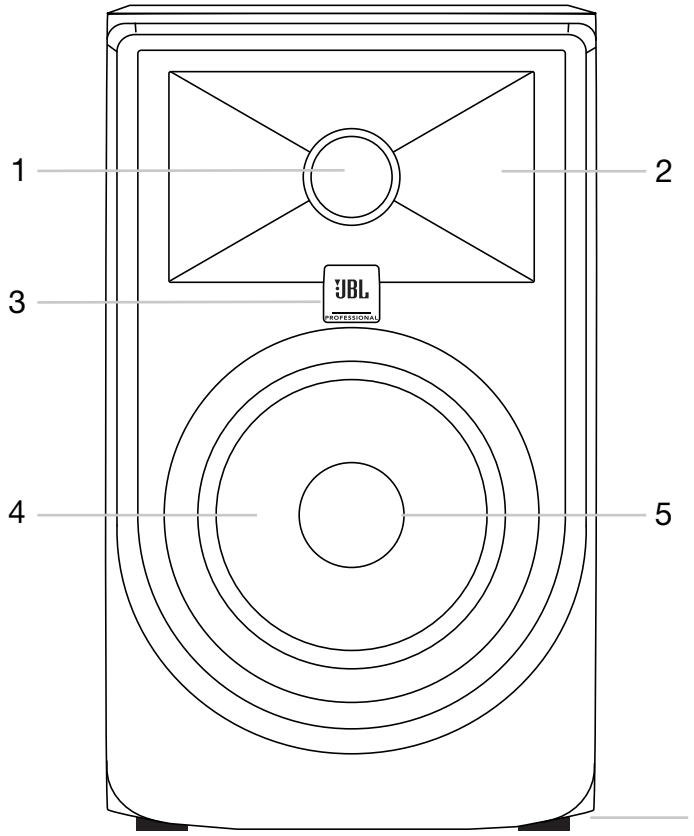

Back View

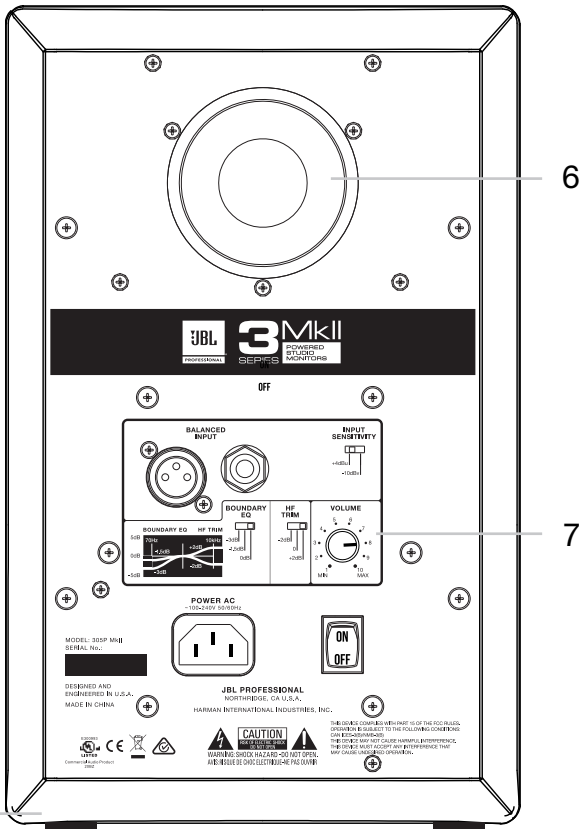

FEATURES

1. **HIGH FREQUENCY TRANSDUCER (TWEETER)** – This transducer reproduces high frequency signals.
2. **WAVEGUIDE** – The specially designed JBL Image Control Waveguide enhances imaging and optimizes the blend of direct and reflected sound in the room, ensuring neutral sound at the mix position.
3. **POWER LED** – This LED illuminates when power is connected and the POWER switch is set to ON. Note that after turning the power switch to the ON setting, there is a short delay prior to illumination of the LED.
4. **LOW FREQUENCY TRANSDUCER (WOOFER)** – This transducer reproduces low frequencies.
5. **DUST DOME** – Protects the inner circuit of the woofer. This self-repairing dust dome is resistant to dents caused by fingers and objects.
6. **LOW FREQUENCY PORT** – The patented Slip Stream™ Port works in conjunction with the low frequency transducer to provide accurate low frequency performance.
7. **INPUT PANEL** – This panel includes the power connector, input connectors, and user controls.
8. **PADS** – Four self-adhering pads are supplied with each studio monitor.

INPUT PANEL

9. **XLR INPUT** – Connect professional equipment to this connector using a balanced XLR plug.

10. **6MM (¼") INPUT** – Connect professional equipment to this connector using a 6mm (¼") balanced plug. Connect consumer equipment to this connector using a 6mm (¼") unbalanced plug.

11. **INPUT SENSITIVITY SWITCH** – Set this switch to +4dBu to protect from overload when connecting to professional equipment and sources with high output level capabilities. Set this switch to -10dBV when connecting to lower-level consumer-grade audio equipment or to the LSR310S subwoofer.

12. **BOUNDARY EQ SWITCH** – This switch is used to compensate for low frequency anomalies that may occur when speakers are placed on a work surface or in close proximity to walls. Settings include 0dB, -1.5dB, and -3dB. Select the setting that provides the most natural bass response for the application.

13. **HIGH FREQUENCY TRIM SWITCH** – This switch allows boost or attenuation of high frequency output by 2dB. Select the setting that provides the desired high frequency response for the application.

14. **VOLUME CONTROL** – Use this control to set the maximum listening level.

15. **POWER RECEPTACLE** – Connect the included power cord to this receptacle.

16. **POWER SWITCH** – This switch turns the speaker on or off.

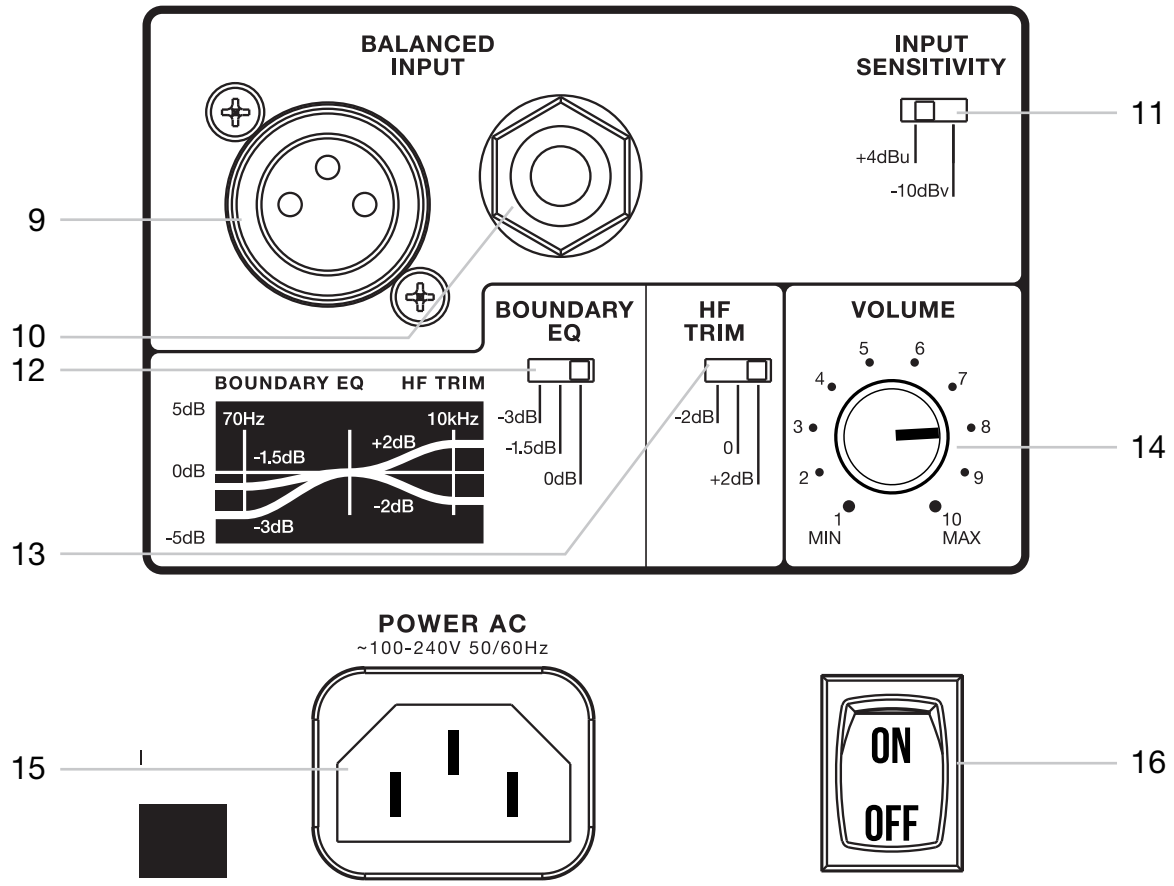

AUDIO CONNECTIONS

Connect signal sources to either the XLR or 6mm (¼") INPUT connectors. Connect only a single signal source to the speaker using either the XLR INPUT connector, OR the 6mm (¼") TRS INPUT connector. Do not connect signal sources to both input connectors simultaneously.

AUTO STANDBY FEATURE

3 Series MkII models bearing the CE mark include an automatic low-power standby feature that reduces power consumption when no signal is detected for a period of twenty minutes. When used in professional applications in which auto-low power standby is not desirable, the feature can be disabled. The feature is enabled by default.

Use the following procedure to disable the auto-low power standby mode:

1. Power speaker OFF.
2. Set BOUNDARY EQ to the “0dB” setting.
3. Set HF Trim to “+2dB” setting.
4. Set the VOLUME control to “1” (full counter-clockwise setting).
5. Power the speaker ON.
6. Within a period of 5 seconds following power-ON:
   - Set BOUNDARY EQ to the “-3dB” setting and...
   - Set the HF TRIM switch to the “-2dB” setting.
7. The front panel LED will flash for 5 seconds indicating the low-power auto-standby mode has been disabled and will remain disabled upon subsequent power cycles.

Use the following procedure to enable the auto-standby mode:

1. Power the speaker OFF.
2. Set BOUNDARY EQ to the “-3dB” setting.
3. Set HF TRIM to the “-2dB” setting.
4. Set the VOLUME control to “1” (full counter-clockwise setting).
5. Power the speaker ON.
6. Within a period of 5 seconds following power-ON:
   - Set the BOUNDARY EQ switch to the “0dB” setting and...
   - Set the HF TRIM switch to the “+2dB” setting.
7. The front panel LED will flash for 5 seconds indicating the low-power auto-standby mode has been enables and will remain enabled upon subsequent power cycles.

Section 5: LSR310S Powered Studio Subwoofer

Front View

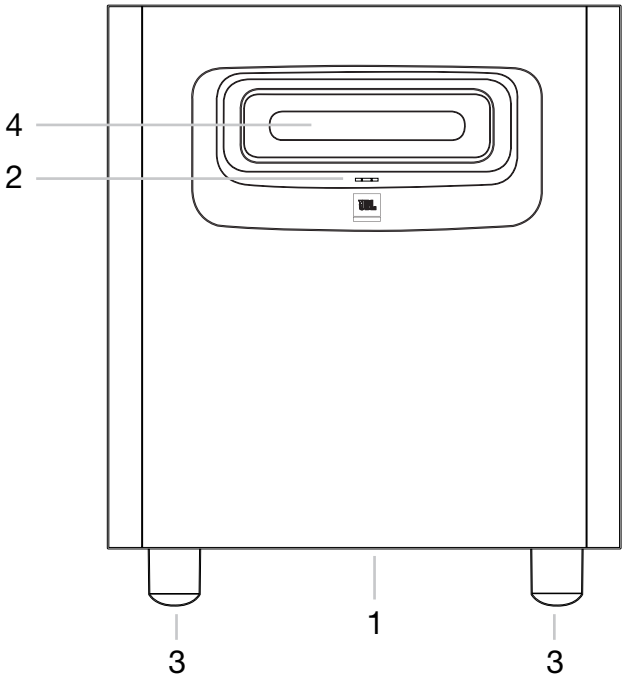

Back View

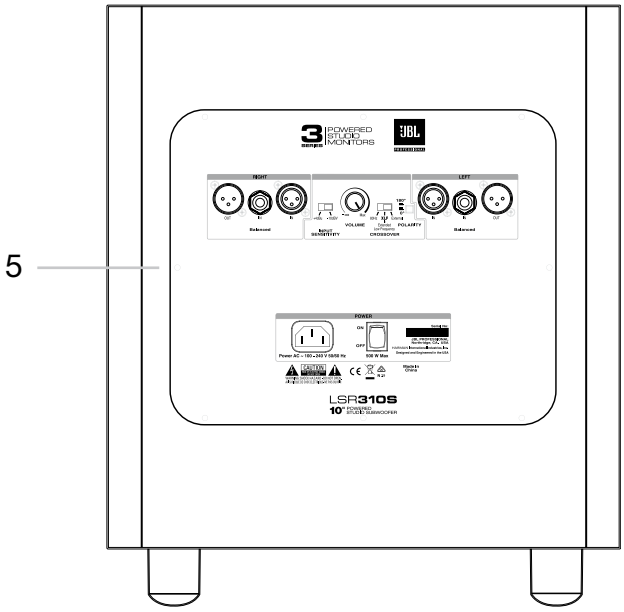

Bottom View

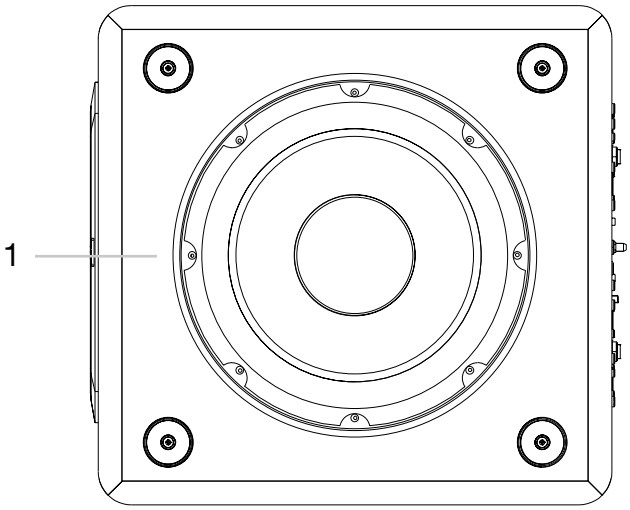

FEATURES

1. **LOW FREQUENCY TRANSDUCER (WOOFER)** – This transducer reproduces low frequency signals.
2. **POWER LED** – This LED illuminates when power is connected and the POWER switch is set to ON.
3. **FEET** – These feet elevate the subwoofer to prevent acoustic coupling with the floor.
4. **LOW FREQUENCY PORT** – This port works in conjunction with the low frequency transducer to provide accurate low frequency performance.
5. **INPUT PANEL** – This panel includes the power connector, input connectors, and user controls.

INPUT PANEL

6. **RIGHT AND LEFT XLR INPUTS** – Connect professional equipment to these connectors using balanced XLR plugs.

7. **RIGHT AND LEFT 6MM (¼")** – Connect professional equipment to these connectors using 6mm (¼") balanced plugs. Connect consumer equipment to these connectors using 6mm (¼") unbalanced plugs.

8. **RIGHT AND LEFT XLR OUTPUTS** – Connect these outputs to the 3 Series MkII speakers or other powered speakers or power amplifier in your monitoring system.

9. **INPUT SENSITIVITY SWITCH** – Set this switch to the +4dBu setting when connecting professional equipment and sources with very high output. Set this switch to -10dBV when connecting to lower-level consumer-grade audio equipment.

   NOTE: When the LSR310S is used in a system with 3 Series MkII speakers, set the INPUT SENSITIVITY switch on the 305P, 306P, or 308P MkII to the -10dBV setting regardless of the LSR310S input sensitivity switch setting.

10. **VOLUME CONTROL** – Use this control to balance the volume of the subwoofer with the volume of the speakers in the system.

11. **CROSSOVER FREQUENCY** – This crossover provides three settings: 80Hz, XLF, and External. The 80Hz setting is recommended for use with studio monitors, including the 305P, 306P, or 308P MkII. The External setting allows use of an outboard active crossover. Select the XLF (Extended Low Frequency) setting to activate a circuit that emulates the bass tuning commonly applied to club playback systems.

12. **POLARITY** – Enables optional 180 degree polarity reversal of the subwoofer output to optimize the blend of the subwoofer with the main speakers according to relative speaker and listening positions. Select the setting that produces the greatest amount of bass when heard at the listening position.

13. **POWER RECEPTACLE** – Connect the included power cord to this receptacle.

14. **POWER SWITCH** – Set this switch to the ON position to operate the subwoofer. Set this switch to the OFF position when the subwoofer is not in use.

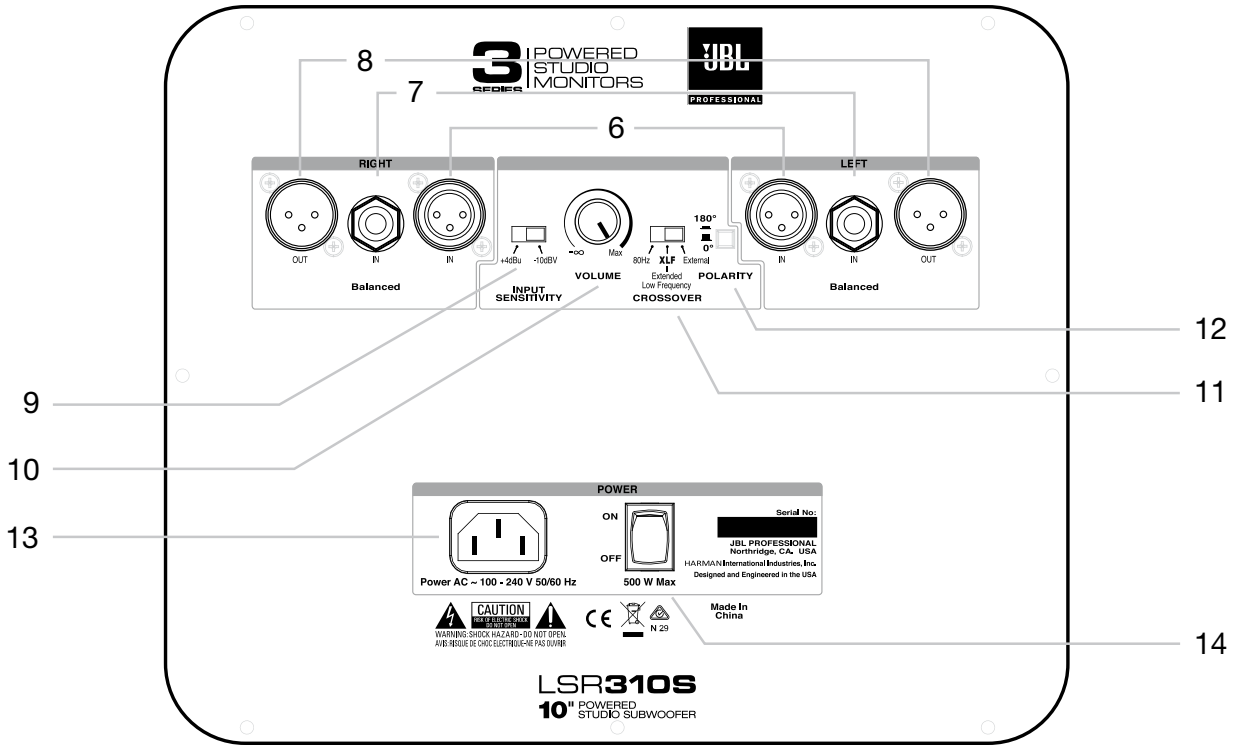

AUDIO CONNECTIONS

Connect signal sources to either the XLR or 6mm (¼") INPUT connectors. Connect a single signal source to the speaker using either the XLR INPUT connectors, OR the 6mm (¼") TRS INPUT connectors. Do not connect multiple signal sources to the XLR and 6mm (¼") input connectors simultaneously.

If the LSR310S subwoofer is being used to reproduce the .1 LFE channel in a surround sound system, connect the .1 LFE signal to either the LEFT or RIGHT input of the subwoofer.

SETTING THE SUBWOOFER LEVEL

When the LSR310S subwoofer is used in a system with 3 Series MkII Studio Monitors, the ideal balance is achieved when the position of the subwoofer VOLUME control is set to the same position as the main speaker VOLUME controls. However, note that the placement of the speakers in the room can affect the amount of bass heard at the listening position. If more or less subwoofer volume is desired, use the subwoofer VOLUME control to achieve the optimum balance for the application and your preference.

PLACEMENT AND POLARITY SETTING

Because the human ear cannot easily recognize the origin of low frequency sounds (the sounds are said to be “non-directional”), subwoofer placement is not nearly as critical as main channel speaker positioning. The LSR310S is designed to be placed directly on the floor and not elevated or mounted in any way. Set the POLARITY switch to the setting that yields a stronger perceived bass response at the listening position.

In a stereo system, the subwoofer should optimally be placed between the two main speakers. In a surround sound system, the subwoofer should be placed between the center and left channel speakers or the center and right channel speakers. Precise central placement is not necessary. Centered positioning in the room can sometimes cause unwanted cancellation of low frequency content, so it is recommended that the subwoofer be placed slightly off-center and not at the midpoint between the left and right walls.

CROSSOVER SETTINGS AND BASS MANAGEMENT

"Bass management" is a term that refers to the practice of using a subwoofer to reproduce the bass frequencies of the main channels. Because of the physiology of the human ear, low frequencies are largely non-directional. Given an adequate listening distance, we can't easily tell where bass signals are coming from. Thus, it makes little or no difference to the listening experience whether the bass component in a sound comes from the originating speaker—which may be off to your left or right, or even behind you—or from a dedicated subwoofer which is better equipped and better positioned in the room to reproduce low frequencies. For that reason, you may want to use an LSR310S subwoofer to reproduce all the bass frequencies in the system.

When using an LSR310S subwoofer in the system, bass management is accomplished by simply routing the left and right mix channels to the LSR310S inputs and then from the LSR310S outputs to the left and right speakers. The frequency at which the subwoofer divides signals to the sub and the left and right speakers can be set using the CROSSOVER FREQUENCY selector switch on the input panel of the LSR310S.

The LSR310S offers three crossover settings:

- **80Hz**
  The 80Hz setting is recommended when the goal is a full range reference monitor system that accurately portrays content below the cut-off frequency of the main speakers. The 80Hz setting provides a smooth transition between the subwoofer and main speakers without audible localization of bass, creating the perception of a full range system with no subwoofer.

- **XLF**
  A trend in music production is the requirement for enhanced low frequency response in the control room. Artists and producers involved in the production of dance music appreciate the ability to audition their work as it might sound when played on a system with enhanced low frequency tuning, commonly employed in dance clubs.

  A JBL first, the LSR310S includes a special XLF (Extended Low Frequency) setting that emulates the response curve applied to a club playback system. When the XLF crossover setting is selected, a 120Hz high-pass filter is engaged in conjunction with a 10dB boost at 60Hz with a bandwidth of 0.5 octaves. Using this setting, the bass output more than doubles and the character of the low frequency energy approximates that of a club system.

  Continuous low frequency energy with very high peak SPL is made possible by JBL's new long excursion low frequency driver, working in concert with JBL's patented Slip Stream™ Port, and powered by a 200 watt Class-D amplifier. A protective circuit allows the LSR310S to continuously produce low frequencies at high output levels without failure. In situations where positioning will allow, an additional 6dB of output can be achieved by positioning the LSR310S subwoofer adjacent to a wall or at the intersection of two walls.

- **External**
  Select this setting when connecting the subwoofer to an external active crossover. Note that when the External option is selected, the XLR LEFT and RIGHT OUT connectors are disabled.

SURROUND SOUND SYSTEMS AND LFE

The LSR310S subwoofer can be used to reproduce the LFE (Low Frequency Effects) or .1 channel in a surround sound system. In film production applications, the LFE channel contains low frequency effects, such as the sounds of explosions and other sounds with a strong low frequency component. In music applications, the LFE channel usually contains low frequency instruments such as bass, bass drum, and synthesizer elements.

TWO CHANNEL SYSTEMS

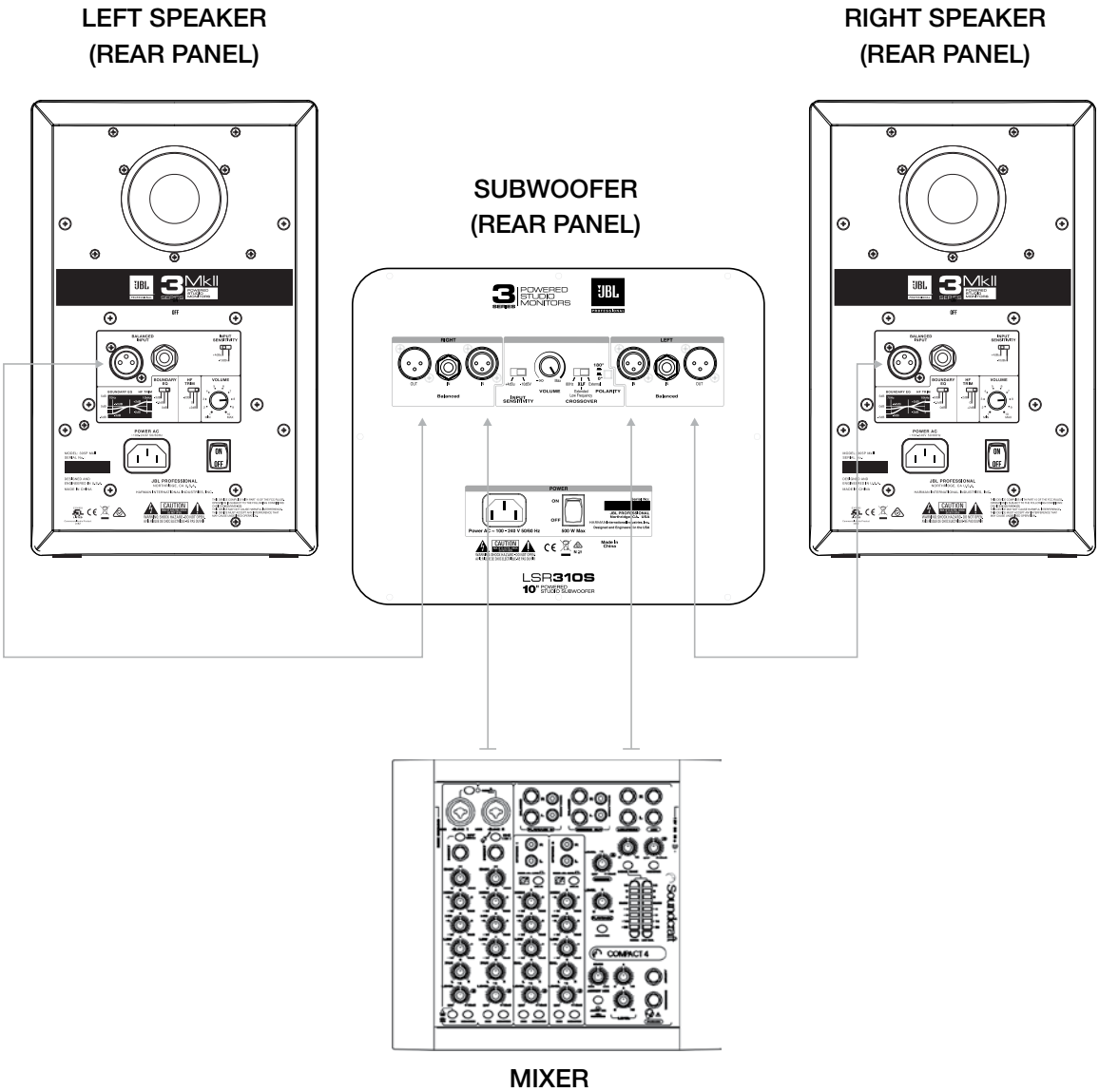

SURROUND SOUND SYSTEMS

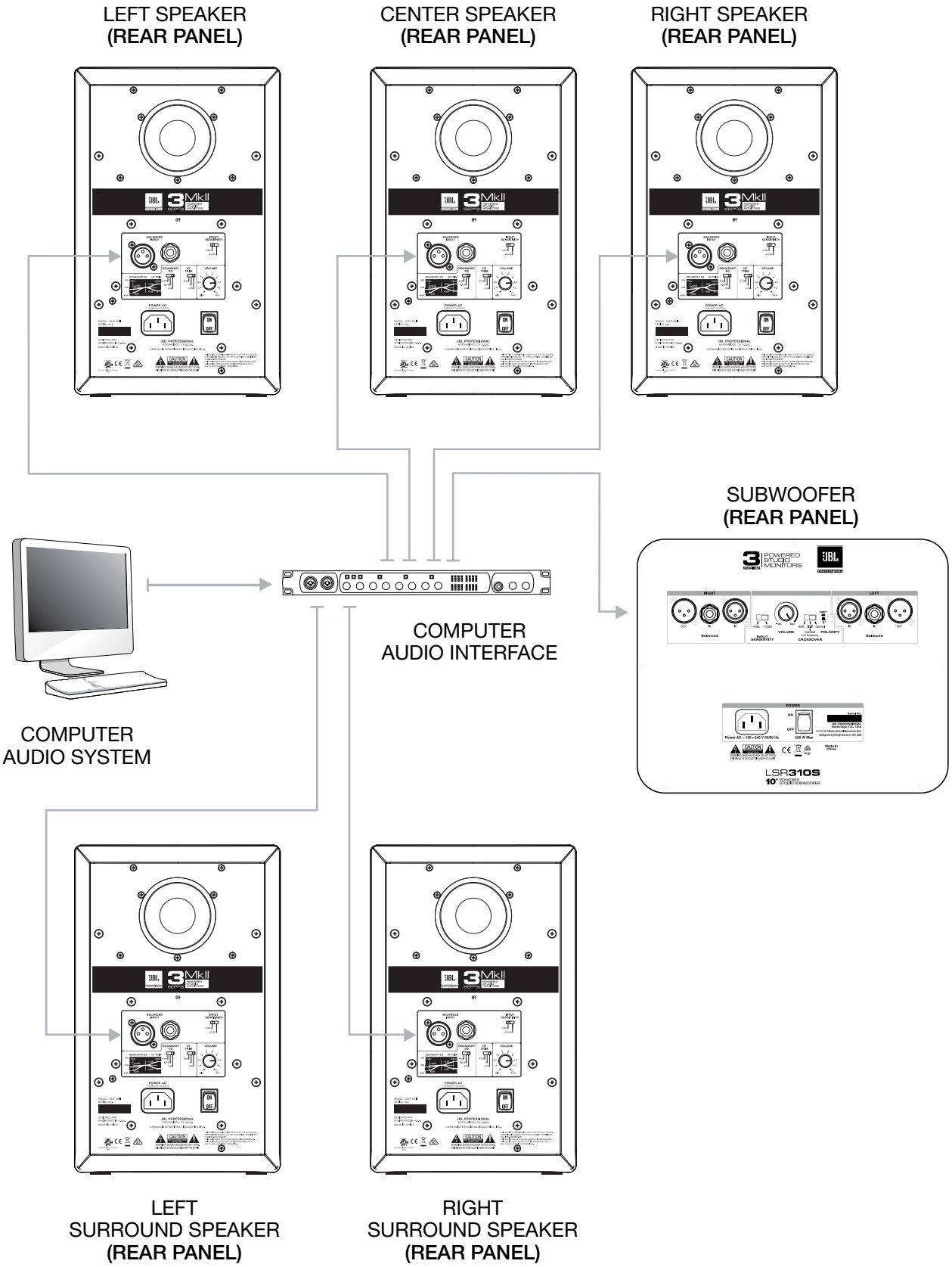

Section 7: Troubleshooting

Issue: There is no sound from the speakers.

- Confirm the power cable is connected to the speaker and the POWER switch is set to the ON position.
- Make sure the POWER LED is illuminated on the front of the speaker.
- Make sure a signal source is connected to the speaker and that it is producing sound.
- Make sure the speaker's VOLUME control is not set to the full counter-clockwise (minimum) position.

Issue: The signal is distorted.

- Verify the speaker's INPUT SENSITIVITY switch is set to +4dBu. If the distortion persists, even with the speaker's VOLUME control set low, inspect the gain stages throughout the system to determine which circuit in the signal path is being overdriven.

Issue: The signal level is low.

- Ensure the speaker's VOLUME control is turned up.
- Try setting the speaker's INPUT SENSITIVITY switch to -10dBV.

Issue: The speaker or subwoofer sounds boomy.

- If using the 305P, 306P, or 308P MkII Studio Monitors without the LSR310S Studio Subwoofer, try lifting one of the speakers off of the supporting surface to see if the boominess is lessened. If it is, the speaker is likely resonating through the surface it is sitting upon. Try isolating the speakers using a third-party speaker isolation product. Alternatively, try engaging the BOUNDERY EQ on the speakers. Try both the -1.5dB and -3dB settings to determine which setting provides the most natural bass response.
- If using the LSR310S Studio Subwoofer, try locating the subwoofer in a different position in the room, away from corners. Try placing the subwoofer at the listening position and walk around the room while listening to the system. When you find a practical position that provides the desired bass response, try placing the subwoofer at that location.

If the above measures do not correct the problem, please contact JBL Professional Customer Service for assistance.

Section 8: Specifications

	305P	306P	308P	LSR310S
Frequency Range (-10dBV):	43Hz – 24kHz	39Hz – 24kHz	37Hz – 24kHz	27Hz
Crossover:	1725Hz 4th Order Acoustic Linkwitz-Riley	1425Hz 4th Order Acoustic Linkwitz-Riley	1800Hz 4th Order Acoustic Linkwitz-Riley	- - -
Maximum Continuous SPL:	94 dB*	98 dB*	102 dB*	105 dB**
Maximum Peak SPL:	108dB*	110dB*	112dB*	113dB**
Maximum Peak Input Level (-10dBV / +4dBu):	+6dBV / +20.3dBu	+6dBV / +20.3dBu	+6dBV / +20.3dBu	+6dBV / +20.3dBu
Input Connectors:	1 x XLR, 1 x TRS Balanced	1 x XLR, 1 x TRS Balanced	1 x XLR, 1 x TRS Balanced	2 x XLR, 2 x TRS Balanced
Input Sensitivity: (-10dBV input)	92dB / 1m	92dB / 1m	92dB / 1m	92dB / 1m
HF Driver Size:	25mm (1")	25mm (1")	25mm (1")	- - -
LF Driver Size:	127mm (5")	165mm (6.5")	203mm (8")	250mm (10")
HF Driver Power Amp:	41W Class-D	56W Class-D	56W Class-D	- - -
LF Driver Power Amp:	41W Class-D	56W Class-D	56W Class-D	200W Class-D
HF Trim Control:	HF Shelf @ 4.4kHz: +2dB, 0dB, -2dB	HF Shelf @ 4.4kHz: +2dB, 0dB, -2dB	HF Shelf @ 4.4kHz: +2dB, 0dB, -2dB	- - -
Boundary EQ Control:	LF Shelf @ 50Hz: -3dB, -1.5dB, 0dB	LF Shelf @ 50Hz: -3dB, -1.5dB, 0dB	LF Shelf @ 50Hz: -3dB, -1.5dB, 0dB	- - -
AC Input Voltage:	100 – 240 VAC (±10%), 50/60Hz	100 – 240 VAC (±10%), 50/60Hz	100 – 240 VAC (±10%), 50/60Hz	100-240 VAC +/- 10% 50/60Hz
Power Consumption:	127W Max	185W Max	224W Max	500W Max
Enclosure Construction:	15mm MDF	15mm MDF	15mm MDF	18mm (3/4 in) MDF
Enclosure Finish:	Matte Black PVC	Matte Black PVC	Matte Black PVC	Matte Black PVC
Baffle Construction:	Injection-Molded Structural ABS	Injection-Molded Structural ABS	Injection-Molded Structural ABS	- - -
Cabinet Dimensions (H x W x D***):	298 x 185 x 231mm (11.7" x 7.3" x 9.1")	361 x 224 x 282mm (14.2" x 8.8" x 11.1")	419 x 254 x 308mm (16.5" x 10" x 12.1")	448 x 381 x 398mm (17.65" x 15.0" x 15.65")
Display Carton (H x W x D):	354 x 244 x 299mm (13.9" x 9.6" x 11.8")	408 x 285 x 328mm (16.1" x 11.2" x 12.9")	473 x 312 x 358mm (18.6" x 12.3" x 14")	505 x 466 x 476mm (19.9" x 18.3" x 18.7")
Shipping Carton (H x W x D):	373 x 260 x 315mm (14.7" x 10.2" x 12.4")	418 x 292 x 338mm (16.5" x 11.5" x 13.3")	491 x 326 x 372mm (19.3" x 12.8" x 14.6")	520 x 478 x 488mm (20.5" x 18.8" x 19.2")
Net Weight:	4.73 kg (10.43 lbs)	6.1 kg (13.42 lbs)	8.1 kg (17.87 lbs)	15.6 kg (34.3 lbs)
Shipping Weight:	5.72 kg (12.61 lbs)	7.25 kg (15.95 lbs)	9.4 kg (20.73 lbs)	19.1 kg (42 lbs)

* Full bandwidth pink noise, measured C-Weighted

** Measured in half space

*** Depth measured without power cord and audio connectors (typical power cord = 2 inches, typical XLR connector = 2.5 inches)

Section 9: JBL Service Contact Information

MAILING ADDRESS:
JBL Professional
8500 Balboa Blvd.
Northridge, CA 91329

SHIPPING ADDRESS:
Please contact JBL Professional Customer Service for shipping information prior to repairs.

CUSTOMER SERVICE:
Monday through Friday
8:00am – 5:00pm
Pacific Coast Time in the U.S.A.
(800) 8JBLPRO (800.852.5776)
www.jblproservice.com

PRODUCT REGISTRATION:
Register your product online at www.jblpro.com/registration

ON THE WORLD WIDE WEB:
www.jblpro.com

PROFESSIONAL CONTACTS, OUTSIDE THE USA:
Contact the JBL Professional Distributor in your area. A complete list of JBL Professional international distributors is provided at our U.S.A. website: www.jblpro.com

EN DEHORS DES ETATS-UNIS:
Contacter votre Distributeur JBL Professional. Une liste complète de nos distributeurs internationaux est disponible sur le site web—www.jblpro.com

INTERNATIONAL:
Wenden Sie sich an Ihre örtliche JBL Professional Vertretung. Eine vollständige Liste der internationalen JBL-Vertretungen finden Sie auf unserer Website unter www.jblpro.com

FUERA DE LOS ESTADOS UNIDOS:
Comuníquese con el distribuidor de JBL Professional de su zona. En nuestro sitio web, www.jblpro.com, encontrará una lista completa de los distribuidores de JBL International.

Section 10: Product Warranty Information

The JBL Limited Warranty on professional loudspeaker products (except for enclosures) remains in effect for five years from the date of the first consumer purchase. JBL amplifiers are warranted for three years from the date of original purchase. Enclosures and all other JBL products are warranted for two years from the date of original purchase.

WHO IS PROTECTED BY THIS WARRANTY?

Your JBL Warranty protects the original owner and all subsequent owners so long as: A.) Your JBL product has been purchased in the Continental United States, Hawaii or Alaska. (This Warranty does not apply to JBL products purchased elsewhere except for purchases by military outlets. Other purchasers should contact the local JBL distributor for warranty information.); and B.) The original dated bill of sale is presented whenever warranty service is required.

WHAT DOES THE JBL WARRANTY COVER?

Except as specified below, your JBL Warranty covers all defects in material and workmanship. The following are not covered: Damage caused by accident, misuse, abuse, product modification or neglect; damage occurring during shipment; damage resulting from failure to follow instructions contained in your Instruction Manual; damage resulting from the performance of repairs by someone not authorized by JBL; claims based upon any misrepresentations by the seller; any JBL product on which the serial number has been defaced, modified
or removed.

WHO PAYS FOR WHAT?

JBL will pay all labor and material expenses for all repairs covered by this warranty. Please be sure to save the original shipping cartons because a charge will be made if replacement cartons are requested. Payment of shipping charges is discussed in the next section of this warranty.

HOW TO OBTAIN WARRANTY PERFORMANCE

If your JBL product ever needs service, write or telephone us at JBL Incorporated (Attn: Customer Service Department), 8500 Balboa Boulevard, PO. Box 2200, Northridge, California 91329 (818/893-8411). We may direct you to an authorized JBL Service Agency or ask you to send your unit to the factory for repair. Either way, you'll need to present the original bill of sale to establish the date of purchase. Please do not ship your JBL product to the factory without prior authorization. If transportation of your JBL product presents any unusual difficulties, please advise us and we may make special arrangements with you. Otherwise, you are responsible for transporting your product for repair or arranging for its transportation and for payment of any initial shipping charges. However, we will pay the return shipping charges if repairs are covered by the warranty.

LIMITATION OF IMPLIED WARRANTIES

ALL IMPLIED WARRANTIES, INCLUDING WARRANTIES OF MERCHANTABILITY AND FITNESS FOR PARTICULAR PURPOSE, ARE LIMITED IN DURATION TO THE LENGTH OF THIS WARRANTY.

EXCLUSION OF CERTAIN DAMAGES

JBL'S LIABILITY IS LIMITED TO THE REPAIR OR REPLACEMENT, AT OUR OPTION, OF ANY DEFECTIVE PRODUCT AND SHALL NOT INCLUDE INCIDENTAL OR CONSEQUENTIAL DAMAGES OF ANY KIND. SOME STATES DO NOT ALLOW LIMITATIONS ON HOW LONG AN IMPLIED WARRANTY LASTS AND/OR DO NOT ALLOW THE EXCLUSION OF INCIDENTAL OR CONSEQUENTIAL DAMAGES, SO THE ABOVE LIMITATIONS AND EXCLUSIONS MAY NOT APPLY TO YOU. THIS WARRANTY GIVES YOU SPECIFIC LEGAL RIGHTS, AND YOU MAY ALSO HAVE OTHER RIGHTS, WHICH VARY, FROM STATE TO STATE.

JBL Professional
8500 Balboa Boulevard
Northridge, CA 91329 USA
Visit us online at www.jblpro.com

Part Number:

5096517-00-C